Memo

TO: Planning Commissioners
RE: Planning Commission 2025 Annual Retreat

Date, Time & Location

October 28, 2025 from 11:00am - 4:00pm. The retreat will begin in the Siskiyou Room at 51 Winburn Way for discussion topics before moving on to lunch and site visits.

Lunch Options

Lunch will be provided at a location to be determined.

No October, 2025 Study Session

The retreat is taking place in lieu of the October 28 Study Session, so the Commission's next meeting will take place on November 11th at the normal time and location.

COMMUNITY DEVELOPMENT DEPARTMENT
51 Winburn Way
Ashland, Oregon 97520
ashland.or.us
Tel: 541.488.5305
Fax: 541.552.2050
TTY: 800.735.2900

Planning Commission Meeting Agenda

ASHLAND PLANNING COMMISSION

REGULAR MEETING AGENDA

Tuesday, October 14, 2025

Note: Anyone wishing to speak at any Planning Commission meeting is encouraged to do so. If you wish to speak, please rise and, after you have been recognized by the Chair, give your name and complete address for the record. You will then be allowed to speak. Please note the public testimony may be limited by the Chair.

I. CALL TO ORDER

7:00 p.m., Civic Center Council Chambers, 1175 E. Main Street

II. ANNOUNCEMENTS

1. Staff Announcements
2. Advisory Committee Liaison Reports

III. CONSENT AGENDA

Approval of Minutes

1. August 26, 2025 Special Meeting Minutes
2. September 9, 2025 Regular Meeting Minutes

IV. PUBLIC FORUM

Note: To speak to an agenda item in person you must fill out a speaker request form at the meeting and will then be recognized by the Chair to provide your public testimony. Written testimony can be submitted in advance or in person at the meeting. If you wish to discuss an agenda item electronically, please contact PC-public-testimony@ashland.or.us by 10:00 a.m. on October 14, 2025 to register to participate via Zoom. If you are interested in watching the meeting via Zoom, please utilize the following link: https://zoom.us/j/92328184155

V. TYPE II PUBLIC HEARINGS

PLANNING ACTION: PA-T2-2025-00060
SUBJECT PROPERTY: 300 Clay St. (Map 39 1E 11CB Tax Lot 1100)
OWNER/APPLICANT: Rogue Planning & Development Services, LLC for Bentella LLC
DESCRIPTION: A request for Site Design Review permit approval to construct four four-plex buildings as part of Phase 1 in the recently approved Caldera Oaks Subdivision at 300 Clay Street. Each four-plex consists of four two-story units. Eight of the 16 total units will be deed-restricted affordable housing. The application includes a request for a Solar Setback Exception to allow the northernmost four-plex building to cast a greater shadow on the property to the north (2272 Dollarhide Way) than would be cast by a sixfoot fence built on the property line; the property owner to the north has agreed to the proposed shadowing. **COMPREHENSIVE PLAN DESIGNATION:** Suburban Residential; **ZONING:** R-1-3.5; **MAP:** 39-1E-11-CB; **TAX LOT:** 1100

VI. OPEN DISCUSSION

VII. ADJOURNMENT

Next Meeting Date: October 28, 2025 - Planning Commission Annual Retreat

Next Meeting Date:

If you need special assistance to participate in this meeting, please contact Derek Severson at planning@ashlandoregon.gov or 541.488.5305 (TTY phone number 1.800.735.2900). Notification at least three business days before the meeting will enable the City to make reasonable arrangements to ensure accessibility to the meeting in compliance with the Americans with Disabilities Act.

Planning Commission Minutes

Note: Anyone wishing to speak at any Planning Commission meeting is encouraged to do so. If you wish to speak, please rise and, after you have been recognized by the Chair, give your name and complete address for the record. You will then be allowed to speak. Please note the public testimony may be limited by the Chair.

August 26, 2025
SPECIAL MEETING
***DRAFT* Minutes**

I. CALL TO ORDER:

Chair Verner called the meeting to order at 7:00 p.m. at the Civic Center Council Chambers, 1175 E. Main Street.

Commissioners Present:
Lisa Verner
Eric Herron
Kerry KenCairn
Russell Phillips

Staff Present:
Brandon Goldman, Community Development Director
Derek Severson, Planning Manager
Michael Sullivan, Executive Assistant
Jordan Rooklyn, Deputy City Manager

Absent Members:
John Maher
Susan MacCracken Jain

Council Liaison:
Jeff Dahle (absent)

II. ANNOUNCEMENTS

1. Staff Announcements:

Community Development Director Brandon Goldman made the following announcement:

- The Southern Oregon University (SOU) master plan adoption, previously scheduled to be heard by City Council on August 19, was postponed until October 7, 2025. He explained that SOU sought clarification on the application of conditional use permits for projects within 50 feet of privately-held, residentially zoned property.
- The Grand Terrace development at 1511 Highway 99 was postponed from the August 19 City Council meeting to September 16 at the applicant's request. This delay was to allow time for the recording of a boundary line adjustment that was one of the Planning Commission's conditions, which Jackson County had approved but not fully processed.

2. Advisory Committee Liaison Reports – None

III. PUBLIC FORUM

City residents Bruce Bergstrom and Allison Laughlin spoke regarding drainage problems on Roca Street.

In compliance with the Americans with Disabilities Act, if you need special assistance to participate in this meeting, please email planning@ashland.or.us. Notification 72 hours prior to the meeting will enable the City to make reasonable arrangements to ensure accessibility to the meeting (28 CFR 35.102-35.104 ADA Title 1).

Better Together

Chair Verner and Brandon Goldman advised the speakers that the Planning Commission does not have jurisdiction over infrastructure for existing developments, and that their concerns would be better addressed to the Public Works Department. Goldman noted that Public Works had identified the problems and were likely looking to make improvements. He also mentioned that since these comments related to an agenda item (the Fern Street right-of-way vacation), they should be presented to City Council when they hold their public hearing on the matter, tentatively scheduled for October 7, 2025.

IV. TYPE II PUBLIC HEARING – Closed – Meeting Limited to Commission Discussion & Decision

SUBJECT PROPERTY: Fern Street Public Right-of-Way north of 648 Roca Street
OWNER / APPLICANT: City of Ashland/Public Works Department
DESCRIPTION: The Planning Commission will consider a request to vacate a portion of the Fern Street right-of-way just north of 648 Roca Street and make a recommendation to the City Council. **COMPREHENSIVE PLAN DESIGNATION:** Southern Oregon University; **ZONING:** SO; **MAP & TAX LOT:** Public Right of Way

Chair Verner noted that the Public Hearing had been closed on July 22, 2025, but the record was left open for written testimony until 4:00 PM on August 26, 2025, and directed the Commission's attention to public comments submitted prior to the meeting, including a memo from SOU which was submitted after the packet had been posted (see attachment #1.)

Chair Verner closed the Public Record at 7:15 p.m.

Ex Parte Contact
No ex parte contact was disclosed.

Deliberations and Decision
The Commission discussed several key issues surrounding the application, including the drainage concerns, pedestrian public access, and the dedication of the riparian area and steep slopes.

Commissioners Phillips/KenCairn m/s that the Commission recommend that the City Council approve the requested right-of-way vacation consistent with staff's recommendations with the following conditions: a pedestrian easement be provided extending from Roca Street to Madrone Street; the inclusion of a 10-foot public utility easement for a future storm-drain installation along the frontage of Roca Street as necessary; a deed restriction, for public use of the steep-slope area on eastern portion of the property and the riparian area along Roca Creek, shall be provided for permanent public access. Roll Call Vote: All AYES. Motion Passed 4-0.

In compliance with the Americans with Disabilities Act, if you need special assistance to participate in this meeting, please email planning@ashland.or.us. Notification 72 hours prior to the meeting will enable the City to make reasonable arrangements to ensure accessibility to the meeting (28 CFR 35.102-35.104 ADA Title 1).

Better Together

V. DISCUSSION ITEMS

1. Special Permits

Deputy City Manager Jordan Rooklyn presented on streamlining the City's special event permitting process. She explained that currently the City has 11 different short-term event permit types across six different departments, making it challenging for event organizers to navigate (see attachment #2).

Ms. Rooklyn's goal is to consolidate all short-term event permitting into one section of code, overseen by one department, with one application that all departments can review together, and one permit issued to the permit holder. She explained that creating this system would require code changes, including two short-term permits currently exist within Chapter 18 that would be moved to Chapter 2 under the Administration office:

- Temporary uses (18.2.2.030.H)
- Short-term food truck events (18.2.3.0.145)

The Commission expressed appreciation for the streamlining efforts and supported moving forward with the proposed changes without waiting for a joint session with the City Council.

2. Legislative Updates

Planning Supervisor Derek Severson presented a summary of legislation from the 2025 state legislative session affecting land use regulations. The changes primarily focused on housing, with additional regulations concerning child care facilities, wildfire risk, and other planning matters. Key legislation included:

- House Bill 2138: Addressing middle housing and infill development barriers
- Senate Bill 974: Imposing timelines on engineering plan review
- House Bill 3560: Requiring cities to allow child care centers as outright permitted uses in residential zones with density over 12 units per acre
- Various bills addressing wildfire risk, recreational immunity, and other planning topics

Chair Verner asked how HB 2005 (citing of psychiatric and behavioral health care facilities) might apply to a previously reviewed permit for a respite center. Mr. Goldman and Mr. Severson explained that respite centers were not under the same definition as residential treatment facilities, with

In compliance with the Americans with Disabilities Act, if you need special assistance to participate in this meeting, please email planning@ashland.or.us. Notification 72 hours prior to the meeting will enable the City to make reasonable arrangements to ensure accessibility to the meeting (28 CFR 35.102-35.104 ADA Title 1).

Better Together

residential treatment facilities being used as residences while respite centers had limits on length of stay.

IV. OPEN DISCUSSION

The commission scheduled its annual retreat for Tuesday, October 28, 2025, with the exact time to be determined. The retreat would include discussions of public meeting law with the City Attorney, wildfire safety issues with the Fire Marshal, and potential tours of new developments in the city, including apartments at Iowa and Garfield as well as the Goodwill development.

V. ADJOURNMENT

Meeting adjourned at 8:10 p.m.

Submitted by,
Michael Sullivan, Executive Assistant

In compliance with the Americans with Disabilities Act, if you need special assistance to participate in this meeting, please email planning@ashland.or.us. Notification 72 hours prior to the meeting will enable the City to make reasonable arrangements to ensure accessibility to the meeting (28 CFR 35.102-35.104 ADA Title 1).

Better Together

Planning Commission Minutes

Note: Anyone wishing to speak at any Planning Commission meeting is encouraged to do so. If you wish to speak, please rise and, after you have been recognized by the Chair, give your name and complete address for the record. You will then be allowed to speak. Please note the public testimony may be limited by the Chair.

September 9, 2025
REGULAR MEETING
***DRAFT* Minutes**

I. CALL TO ORDER:

Chair Verner called the meeting to order at 7:00 p.m. at the Civic Center Council Chambers, 1175 E. Main Street.

Commissioners Present:
Lisa Verner
Susan MacCracken Jain
John Maher
Russell Phillips
Kerry KenCairn

Staff Present:
Brandon Goldman, Community Development Director
Carmel Zahran, Assistant City Attorney
Michael Sullivan, Executive Assistant

Absent Members:
Eric Herron

Council Liaison:
Jeff Dahle (absent)

II. ANNOUNCEMENTS

1. Staff Announcements:

Community Development Director Brandon Goldman made the following announcements:

- The City Council cancelled its September 2, 2025 meeting.
- Deputy City Manager Jordan Rooklyn will attend the September 23, 2025 Planning Commission Study Session for a discussion item to look at potential changes to Chapter 18 with regards to Special Permits.
- The project at 231 Granite, PA-T2-2024-00053, was appealed to the Land Use Board of Appeals (LUBA) and City staff have compiled the record and sent it to the state for review.

2. Advisory Committee Liaison Reports – None

III. CONSENT AGENDA

Approval of Minutes

1. August 12, 2025 Regular Meeting Minutes

Commissioners Maher/MacCracken Jain m/s to approve the consent agenda as presented. All AYES. Motion passed 5-0.

In compliance with the Americans with Disabilities Act, if you need special assistance to participate in this meeting, please email planning@ashland.or.us. Notification 72 hours prior to the meeting will enable the City to make reasonable arrangements to ensure accessibility to the meeting (28 CFR 35.102-35.104 ADA Title 1).

IV. PUBLIC FORUM – None

V. UNFINISHED BUSINESS

Approval of Findings for PA-T2-2025-00059, Kestrel Park Phase III

Commissioners Phillips/Maher m/s to approve the Findings as presented. Commissioner KenCairn recused herself from voting due to a past involvement with the project. Roll Call Vote: All AYES. Motion passed 4-0.

VI. DISCUSSION ITEMS

Public Meeting Law Training

- **Ashland Legal Department** – Overview presentation and Q&A
- **Optional Video** - Two-hour Public Meeting Law training available for home viewing: https://www.youtube.com/watch?v=DKaBlcaaGAk

Assistant City Attorney Carmel Zahran provided a brief overview of guidelines for public officials, including ethics, public records, and public meeting law. She emphasized that that guidelines are legal requirements imposed by Oregon Legislature and are a matter of ethics, not morality. Topics included:

- Prohibited use of Office
- Conflicts of Interest and Potential Conflicts of Interest
- Who is a Public Official?
- Gifts
- Public Records
- Public Meetings
- Ex Parte Contact

VII. OPEN DISCUSSION

Mr. Goldman reminded the Commission that its annual retreat is scheduled for October 28, 2025.

IV. ADJOURNMENT

Meeting adjourned at 7:57 p.m.

Submitted by,
Michael Sullivan, Executive Assistant

In compliance with the Americans with Disabilities Act, if you need special assistance to participate in this meeting, please email planning@ashland.or.us. Notification 72 hours prior to the meeting will enable the City to make reasonable arrangements to ensure accessibility to the meeting (28 CFR 35.102-35.104 ADA Title 1).

Better Together

ATTENTION

For attachments to the August 26, 2025 Minutes, please use the link below:

https://ashlandor.portal.civicclerk.com/event/467/files/agenda/1749

TYPE II PUBLIC HEARING

PA-T2-2025-00060,
300 Clay Street

NOTICE OF PUBLIC HEARING

PLANNING ACTION: PA-T2-2025-00060
SUBJECT PROPERTY: 300 Clay St. (Map 39 1E 11CB Tax Lot 1100)
OWNER/APPLICANT: Rogue Planning & Development Services, LLC for Bentella LLC
DESCRIPTION: A request for Site Design Review permit approval to construct four four-plex buildings as part of Phase 1 in the recently approved Caldera Oaks Subdivision at 300 Clay Street. Each four-plex consists of four two-story units. Eight of the 16 total units will be deed-restricted affordable housing. The application includes a request for a Solar Setback Exception to allow the northernmost four-plex building to cast a greater shadow on the property to the north (2272 Dollarhide Way) than would be cast by a six-foot fence built on the property line; the property owner to the north has agreed to the proposed shadowing. **COMPREHENSIVE PLAN DESIGNATION:** Suburban Residential; **ZONING:** R-1-3.5; **MAP:** 39-1E-11-CB; **TAX LOT:** 1100

ASHLAND PLANNING COMMISSION MEETING: ***Tuesday October 14, 2025 at 7:00 PM, Ashland Civic Center, 1175 East Main Street***

COMMUNITY DEVELOPMENT DEPARTMENT
51 Winburn Way
Ashland, Oregon 97520
ashland.or.us
Tel: 541.488.5305
Fax: 541.552.2050
TTY: 800.735.2900

Notice is hereby given that a PUBLIC HEARING on the following request with respect to the ASHLAND LAND USE ORDINANCE will be held before the ASHLAND PLANNING COMMISSION on meeting date shown above. The meeting will be at the ASHLAND CIVIC CENTER, 1175 East Main Street, Ashland, Oregon. You can watch the meeting on local channel 9, on Charter Communications channels 180 & 181, or you can stream the meeting via the internet by going to https://rvtv.sou.edu and selecting '**RVTV Civic.**' Join the Zoom meeting at: https://zoom.us/j/92328184155

A copy of the application, including all documents, evidence and applicable criteria are available online at "What's Happening in my City" at https://gis.ashland.or.us/developmentproposals/. Copies of application materials will be provided at reasonable cost, if requested. Application materials may be requested to be reviewed in-person at the Ashland Community Development & Engineering Services Building, 51 Winburn Way, via a pre-arranged appointment by calling (541) 488-5305 or emailing planning@ashland.or.us.

The ordinance criteria applicable to this application are attached to this notice. Oregon law states that failure to raise an objection concerning this application, either in person or by letter, or failure to provide sufficient specificity to afford the decision maker an opportunity to respond to the issue, precludes your right of appeal to the Land Use Board of Appeals (LUBA) on that issue. Failure to specify which ordinance criterion the objection is based on also precludes your right of appeal to LUBA on that criterion. Failure of the applicant to raise constitutional or other issues relating to proposed conditions of approval with sufficient specificity to allow this Commission to respond to the issue precludes an action for damages in circuit court.

During the Public Hearing, the Chair shall allow testimony from the applicant and those in attendance concerning this request. The Chair shall have the right to limit the length of testimony and require that comments be restricted to the applicable criteria. Unless there is a continuance, if a participant so requests before the conclusion of the hearing, the record shall remain open for at least seven days after the hearing.

If you have questions or comments concerning this request, please feel free to contact Derek Severson at 541-488-5305 or planning@ashland.or.us.

In compliance with the American with Disabilities Act, if you need special assistance to participate in this meeting, please contact the City Administrator's office at 541-488-6002 (TTY phone number 1-800-735-2900). Notification 72 hours prior to the meeting will enable the City to make reasonable arrangements to ensure accessibility to the meeting. (28 CFR 35.102.-35.104 ADA Title I).

SITE DESIGN AND USE STANDARDS
18.5.2.050

The following criteria shall be used to approve or deny an application:

A. **Underlying Zone:** The proposal complies with all of the applicable provisions of the underlying zone (part 18.2), including but not limited to: building and yard setbacks, lot area and dimensions, density and floor area, lot coverage, building height, building orientation, architecture, and other applicable standards.
B. **Overlay Zones:** The proposal complies with applicable overlay zone requirements (part 18.3).
C. **Site Development and Design Standards:** The proposal complies with the applicable Site Development and Design Standards of part 18.4, except as provided by subsection E, below.
D. **City Facilities:** The proposal complies with the applicable standards in section 18.4.6 Public Facilities and that adequate capacity of City facilities for water, sewer, electricity, urban storm drainage, paved access to and throughout the property and adequate transportation can and will be provided to the subject property.
E. ***Exception to the Site Development and Design Standards:*** The approval authority may approve exceptions to the Site Development and Design Standards of part 18.4 if the circumstances in either subsection 1 or 2, below, are found to exist.

1. There is a demonstrable difficulty meeting the specific requirements of the Site Development and Design Standards due to a unique or unusual aspect of an existing structure or the proposed use of a site; and approval of the exception will not substantially negatively impact adjacent properties; and approval of the exception is consistent with the stated purpose of the Site Development and Design; and the exception requested is the minimum

which would alleviate the difficulty.; or

2. There is no demonstrable difficulty in meeting the specific requirements, but granting the exception will result in a design that equally or better achieves the stated purpose of the Site Development and Design Standards.

EXCEPTION TO SOLAR SETBACKS
18.4.8.020.C

C. Exceptions and Variances. Requests to depart from section 18.4.8.030 Solar Setbacks are subject to 18.4.8.020.C.1 Exception to the Solar Setback, below. Deviations from the standards in section 18.4.8.050 Solar Orientation Standards are subject to subsection 18.5.2.050.E Exception to the Site Development and Design Standards.

1. **Solar Setback Exception.** The approval authority through a Type I review pursuant to section 18.5.1.050 may approve exceptions to the standards in 18.4.8.030 Solar Setbacks if the requirements in subsection a, below, are met and the circumstances in subsection b, below, are found to exist.
    a. That the owner or owners of all property to be shaded sign, and record with the County Clerk on the affected properties' deed, a release form supplied by the City containing all of the following information.
        i. The signatures of all owners or registered leaseholders holding an interest in the property in question.
        ii. A statement that the waiver applies only to the specific building or buildings to which the waiver is granted.
        iii. A statement that the solar access guaranteed by this section is waived for that particular structure and the City is held harmless for any damages resulting from the waiver.
        iv. A description and drawing of the shading which would occur.
    b. The approval authority finds all of the following criteria are met.
        i. The exception does not preclude the reasonable use of solar energy (i.e., passive and active solar energy systems) on the site by future habitable buildings.
        ii. The exception does not diminish any substantial solar access which benefits a passive or active solar energy system used by a habitable structure on an adjacent lot.
        iii. There are unique or unusual circumstances that apply to this site which do not typically apply elsewhere.

Staff Report

ASHLAND PLANNING DEPARTMENT
STAFF REPORT

Before the Planning Commission – October 14, 2025

PLANNING ACTION:	PA-T2-2025-00060
OWNER:	Bentella, LLC
APPLICANT:	Rogue Planning & Development Services
LOCATION:	300 Clay Street. 39 1E 11CB Tax Lot 1100
ZONE DESIGNATION:	R-1-3.5
COMP. PLAN DESIGNATION:	Suburban Residential

ORDINANCE REFERENCES:	18.2.4	General Regulations for Base Zones
	18.2.5	Standards for Residential Zones
	18.3.9	Performance Standards Overlay
	18.3.11	Water Resources Protection Zones
	18.4.5	Tree Preservation and Protection
	18.4.8	Solar Access
	18.5.1	General Review Procedures
	18.5.2	Site Design Review
	18.5.3	Land Divisions & Property Line Adjustments
	18.5.7	Tree Removal Permits
	18.5.8	Annexations
	18.5.9	Comp Plan, Zoning & LUO Amendments
	18.6.1	Definitions

APPLICATION DATE:	September 11, 2025
APPLICATION COMPLETE:	October 6, 2025
PUBLIC MEETING NOTICE:	September 24, 2025 **20 days in advance**
MEETING DATE:	October 14, 2025
120-DAY DEADLINE:	February 3, 2026

PROPOSAL: A request for Site Design Review permit approval to construct four four-plex buildings as part of Phase 1 in the recently approved Caldera Oaks Subdivision at 300 Clay Street. Each four-plex consists of four two-story units. Eight of the 16 total units will be deed-restricted affordable housing. The application includes a request for a Solar Setback Exception to allow the northernmost four-plex building to cast a greater shadow on the property to the north (2272 Dollarhide Way) than would be cast by a six-foot fence built on the property line; the property owner to the north has agreed to the proposed shadowing.

I. Introduction

The parent property was annexed and has received Outline and Final Plan subdivision approvals under the Performance Standards Options Chapter (AMC 18.3.9) for the Caldera Oaks

Subdivision, a 25-lot for residential development consisting of 21 lots for single family residential (SFR) development and four lots to be developed with four-plex townhomes. Four additional areas are to be dedicated as open space. The SFR lots may ultimately develop with single family homes and Accessory Residential Units (ARUs) or with duplexes as allowed under Oregon House Bill 2001. The 16 dwellings in the fourplexes plus the 21 SFR lots equate to a proposed density of 37 dwelling units, and because the original proposal involved annexation there is also an affordable housing requirement. The current request is limited to the four lots being developed with four-plex town homes. Future development of the SFR lots with single family homes, ARUs or duplexes will not require additional Site Design Review.

1) Site Description

The 4.8-acre parent property is Tax lot #1100 of Assessor's Map 39 1E 11CB and is addressed as 300 Clay Street. The parent property has 328 feet of frontage along Clay Street which is fully improved with curb, gutter, sidewalk and park row. Engle Street terminates on both the north and south side of the property. A small 631 square foot residence that the County Assessor indicates was built in 1920 and some accessory structures (shed, horse shelter and carport) are to be demolished to enable development of the parent property.

2) Natural Features

There are no trees remaining on the site.

The adopted Wetland Resource Protection Zone (WRPZ) maps indicate wetlands in two locations; however, the recent annexation included a wetland delineation, reviewed and approved by the Department of State Lands (DSL), which determined that the actual area of wetland is much smaller than on the city's adopted WRPZ maps. The application notes that over the years as development has occurred more of the irrigation waters that used to be in open ditches have instead been rerouted to pipes, and other storm drain infrastructure has been installed which routes drainage from the south into the city system rather than onto the subject property. This has caused a great reduction in water that has historically fed some of these wetlands and resulted in a reduction in their size over the years. In 2022 the most recent wetland delineation was performed and approved by the DSL. The map from the approved wetland delineation shows the extent of the wetland at the north of the subject property and indicates that the area of the wetland is 0.0096 acres or 418 square feet. This 2022 wetland delineation remains valid for a minimum of five years (i.e. until 2027). The plat approved with annexation and subdivision of the property identified a twenty-foot buffer around the identified wetland to be dedicated as an open space amenity, and as infrastructure installation proceeds the wetland and its buffer have been protected with silt fencing.

II. Project Proposal – Site Design Review & Solar Access Exception

1) Site Design Review

The parent property at 300 Clay Street was recently annexed and has received Outline and Final Plan subdivision approvals to create 25-lots for residential development as the Caldera Oaks Subdivision, including 21 lots to be developed individually and four lots proposed for four-plexes.

The current request is for Site Design Review permit approval to construct the four four-plex buildings as part of the subdivision's first phase. Each four-plex consists of four two-story units. Eight of the 16 total units will be deed-restricted affordable housing as required under the annexation. As part of the Site Design Review permit approval request, the application also requests a single Exception to the Site Development and Design Standards. Adjacent to Lot 25, the building is separated from the parking area by only five feet. An Exception to AMC 18.4.4.030.F.2.b. '*Screening Adjacent to a Residential Building*' is requested. The application materials explain that there is not enough room for an eight-foot setback and a continuous hedge to provide sight-obscuring screening.

As required in AMC 18.5.2.020.B.1, the construction of three or more dwelling units on a lot in a residential zone requires Site Design Review approval. Site Design Review is considered under the approval criteria in AMC 18.5.2.050 and the Building Placement, Orientation and Design Standards for Residential Development in AMC 18.4.2.030. The annexation and subdivision approval gave detailed consideration to infrastructure including transportation and utilities, and the discussion of applicable criteria and standards that follows will focus largely on the buildings' placement, orientation and design.

The first approval criterion for Site Design Review focuses on the underlying zone, requiring that, "*The proposal complies with all of the applicable provisions of the underlying zone (part 18.2), including but not limited to: building and yard setbacks, lot area and dimensions, density and floor area, lot coverage, building height, building orientation, architecture, and other applicable standards.*"

The subdivision of the parent property here was approved under the Performance Standards Options Chapter (AMC 18.3.9) where lots are not required to meet the minimum lot size, lot width, lot depth or setback standards of part 18.2, but must provide for the required perimeter setbacks of the parent property. Clay Street is the 'front yard' frontage for the parent parcel, as such a fifteen-foot setback along Clay Street is required, which is what is shown in the applicant's site plan.

The subject property was recently annexed with an R-1-3.5 Suburban Residential Zoning which allows development with a base density of 7.2 dwelling units per acre. The annexation included a standard requirement that the property be developed to at least 90 percent of the base density, which for the subject 4.8-acre parent property equates to 31 dwelling units [(4.8 acres x 7.2 du/acre = 34.56 du) x 0.90 = 31.104 du)]. With an affordable housing density bonus, the annexation and subdivision approval proposed a total of 37 dwellings.

As described in the applicant's narrative, lot coverage is proposed to be less than 54 percent coverage, allowing more than 46 percent landscape coverage and "*...the total coverage of each of the multi-family lots is proposed to be less than 65 percent, as allowed in the zone.*" However, all the lots are zoned R-1-3.5 which allows for a maximum of 55 percent lot coverage for impervious surfaces and a minimum landscaped area of 45 percent. Previous planning action PA-T1-2025-00276 conditioned future development to provide lot coverage calculations that demonstrate compliance with the R-1-3.5 zone. Lot coverage estimates calculated by staff based on the provided documentation indicate coverage as

follows: Lot 22: 44.4%, Lot 23: 41.4%, Lot 24: 44.4%, and Lot 25: 54.5% based on lot sizes shown in the August 18, 2025 plat, and a condition has been recommended below requiring demonstration of lot coverage compliance with each building permit submittal.

The second approval criterion has to do with overlay zones, requiring that, *"The proposal complies with applicable overlay zone requirements (Part 18.3)".* AMC 18.3 includes regulations for Performance Standards Option Subdivisions in AMC 18.3.9, Physical & Environmental Constraints Review in AMC 18.3.10, and Water Resource Protection Zones (WRPZ) in AMC 18.3.11, all of which potentially apply to the subject property. The original subdivision was processed under AMC 18.3.9, and protection of the Wetland WRPZ under AMC 18.3.11 was required along with approval of a Limited Uses permit for the stormwater dispersal trench. The current request involves development as originally envisioned with the annexation and subdivision and does not alter the way that the proposal relates to the overlay zone requirements in AMC 18.3.

The third criterion looks specifically at the Site Development and Design Standards, requiring demonstration that, *"The proposal complies with the applicable Site Development and Design Standards of part 18.4 except as provided by subsection E, below."*

Building Placement, Orientation, and Design

The proposed four-plex structures are accessed via a new private street (Caldera Court) that extends from the intersection of newly extended Engle Street and newly created Caldera Drive off Clay Street. The fourplex structures are set back more than 20 feet from the public street (Engle Street) due to the location of the private street and the large open space (common area) between the parking area and the buildings. The majority of the four structures are located to have a buffer between the structure and the parking areas. However, Lot 25 requires an exception for the lack of a full landscaped buffer due to insufficient space on the lot. All four apartment structures are oriented towards the landscaped common area with walkways leading from the unit entrances through the common area to the parking area and out to the public street. There are no garages proposed with the four-plex units, and no build-to line is required in this zone. Lighting is proposed on site in the form of bollards for common areas and lamp posts for streetlighting. Landscaping is proposed throughout the public common areas. Parking is consistent with the property's prior approval.

While the applicant's submittals do not directly state what specific colors will be used for the development, the concept renderings show neutral and light-colored natural materials, with some darker trim elements. The proposed building materials, colors, and architectural designs would be compatible with the units proposed within the Caldera Oaks Subdivision and other developments in the area. No bright or neon paint colors are proposed. Street trees have been addressed in the prior approval for PSO subdivision and will remain in compliance with that approval.

There are pedestrian connections proposed through the development, leading to the entry of each unit and through the active recreation common areas. The private common areas at

the rear of each unit will be fenced for privacy with a maintenance access gate through each yard. The fences abutting the subdivision common areas, including the stormwater detention swale will have fences that comply with the standards in AMC 18.4.4.060 and not be taller than four feet. The fences between the multi-family units will be six-foot-tall privacy fencing. A detailed landscape and irrigation plan demonstrating compliance with AMC 18.4.4.030 has been provided.

Parking, Access, and Circulation

The proposed development provides a circulation system that accommodates all expected traffic on-site. The on-site circulation system (private street) incorporates street-like features such as sidewalks and shade trees.

The proposed parking area does not exceed the maximum allowed number of voluntarily provided parking spaces. Where a maximum of 32 spaces could be provided, there are 20 spaces provided in the parking area. Five of the spaces are required on-street or common area parking necessary for each lot in a new subdivision. The parking area includes an ADA accessible van parking space and offloading zone. All parking spaces comply with the minimum dimensional standards for width, depth and back-up maneuvering area.

The applicant's materials state that the parking area has been designed to minimize adverse environmental impacts with the use of shade from the tree canopy over the parking area surface and a light-colored surface. The parking area has been designed so that the stormwater is captured and treated through landscape medians. The parking area is less than ½-acre in area. The parking area landscape plan and tree planting plan have been prepared by a licensed landscape architect, and the shade trees have been selected from the Parking Lot Tree list. Applicant's narrative states that the trees are proposed to be planted and maintained to maximize their root health and chances of survival in accordance with the ANSI A3000 standards. The landscape plan uses plants appropriate for the local climate, exposure, and water availability. The plan includes a variety of deciduous, evergreen trees and shrubs, and ground covers.

Landscape, Lighting, and Screening

A continuous, five-foot-wide, concrete-surfaced walkway system extends through the site and connects all phases of development, common areas, parking areas, and building entries. All portions of the site not otherwise developed with buildings, vehicle maneuvering and parking, and other hardscape areas are landscaped in accordance with the standards from AMC 18.4.4.030. Each multi-family lot has less than 54 percent coverage, allowing more than 46 percent landscape coverage.

The applicant's materials indicate that the area of the multi-family development (four-plexes) is approximately 21,120 square feet. Each unit has a large private open space that includes a ten-foot by ten-foot (100 square feet) covered front entry, an 8.25-foot by ten-foot patio, and a fenced rear yard area. The patio and rear yard are accessed directly by a door from the interior of the unit. The rear yard and patio areas account for 4,790 square feet. Approximately 300 square feet per unit is proposed. Between buildings 22 and 23,

and 24, there is an additional area of 35 feet by 61 feet (2,135 square feet) that is a landscaped, "eco-lawn" area.

The open space area provided in conjunction with the multi-family development accounts for 6,925 square feet. This is in addition to the 14,450 square feet provided within the subdivision. The area of common and private outdoor space greatly exceeds the minimum required. According to the standards, when subject to Site Design Review and Performance Standards Option, eight percent of the total lot area is required. This proposal provides for approximately 32.7 percent of the multi-family area in open space. All open space areas that are designated for active use will have grass or "eco-lawn", picnic and play areas that are sloped at less than five percent, with the common open space area containing a covered bicycle parking structure, benches, and tables. None of the structures are enclosed.

Lighting details for the multi-family area is included in the submittals. Bollard ground lights which are shielded from upward light projection and streetlights are proposed around the multi-family development and open space. These lights are labeled as "L-1" and "L-2" respectively. Bicycle parking lights are indicated to match the entry way of the multi-family homes as well.

The applicant's materials show the recycling and refuse disposal areas are to be screened with a site-obscuring fence or solid wall and gate made of concrete and steel. Dimensions were not provided but the applicant states that the gate will be solid and at least five feet tall to prevent view of the recycling/refuse area. The rest of the fenced in area must also meet this requirement. The applicant's findings indicated that each dwelling unit is more than 12 feet from any recycling/refuse disposal area. Fencing for the trash/recycling area and private patios are proposed. No other fencing is proposed on site.

The applicant has requested an exception to AMC 18.4.4.030.F.2.b. "*Screening Adjacent to a Residential Building*" due to the parking area generally abutting the common area which does not leave enough room for the required setback and a continuous hedge screen. Adjacent to Lot 25, the building is separated from the parking area by five feet where there is not sufficient space to relocate the structure without creating the need for an exception elsewhere. This exception is discussed at length below.

Tree Preservation, Protection, and Removal

Tree removal and tree protection were approved as part of the Final Plan application. The tree protection fencing will be installed according to the plan before site disturbance for the construction of the multi-family dwellings. There are a substantial number of mitigation trees proposed as part of the site redevelopment to replace the canopy lost through the tree removal.

The fourth approval criterion considers city facilities, seeking demonstration that, **"***The proposal complies with the applicable standards in section 18.4.6 Public Facilities, and that adequate capacity of City facilities for water, sewer, electricity, urban storm drainage, paved access to and throughout the property, and adequate transportation can and will be*

provided to the subject property." As part of the annexation and subdivision approval, the Planning Commission and Council found that the parent property was adequately served by all city facilities.

The annexation application also included a trip generation assessment and Transportation Planning Rule (TPR) findings prepared by Southern Oregon Transportation and Engineering. Those materials detailed expected trip generation of the proposed development and demonstrated that the proposed development was below the threshold levels which would have triggered a complete Traffic Impact Analysis (TIA) as the development was expected to generate only 30 weekday peak hour trips where the threshold to require a TIA is 50 newly generated vehicle trips. The proposed development includes the creation of new local neighborhood streets connecting Engle Street, as well as a new neighborhood street connecting to Clay Street. All proposed public facilities were proposed to be constructed to City of Ashland standards as part of annexation.

- Clay Street contains an eight-inch water main, eight-inch sewer main, and an 18-inch storm water main.
- Engle Street has eight-inch water mains at both the north and south of the property as well as an eight-inch sewer main and a ten-inch sewer main at the north stub of Engle Street. Due to the nature of gravity systems and the topography of the site no sewer or storm is needed on the southern stub of Engle Street.

With annexation, the Public Works Department confirmed that there were no concerns regarding the capacity of any city facilities, and subsequent to annexation and final plan approval for the subdivision, the applicant has prepared and Public Works has approved full civil drawings for the infrastructure installations necessary to serve development of the parent property as approved. Pre-construction conferences have occurred on-site with city staff and other utility providers, and infrastructure installation is underway. In staff's view, a finding can be made that this approval criterion has been fully satisfied.

The final approval criterion applies to Exception requests, which must satisfy the following criterion:

E. Exception to the Site Development and Design Standards. *The approval authority may approve exceptions to the Site Development and Design Standards of part 18.4 if the circumstances in either subsection 1, 2, or 3, below, are found to exist.*

1. *There is a demonstrable difficulty meeting the specific requirements of the Site Development and Design Standards due to a unique or unusual aspect of an existing structure or the proposed use of a site; and approval of the exception will not substantially negatively impact adjacent properties; and approval of the exception is consistent with the stated purpose of the Site Development and Design; and the exception requested is the minimum which would alleviate the difficulty;*

2. *There is no demonstrable difficulty in meeting the specific requirements, but granting the exception will result in a design that equally or better achieves the stated purpose of the Site Development and Design Standards; or*

3. *There is no demonstrable difficulty in meeting the specific requirements for a cottage housing development, but granting the exception will result in a design that equally or better achieves the stated purpose of section 18.2.3.090. (Ord. 3147 § 9, amended, 11/21/2017)*

The application includes a request for an Exception to AMC 18.4.4.030.F.2.b. '*Screening Adjacent to a Residential Building*' to eliminate the required landscape buffer adjacent to Lot 25. As proposed, the building is separated from the parking area by only a five-foot sidewalk without the full required landscaped buffer, and the application materials indicate that there is not enough room for the required eight-foot setback with a continuous, sight-obscuring hedge screen.

In responding to the Exception criteria, the application materials explain that from the first iterations of the subdivision, site planning has been dictated by the site constraints posed by the natural features and by the relationship to adjacent developments to the north and south, which determined the street layout of the subject property. The nearly level property and the solar ordinance dictated that lots be oriented north/south or be substantially wider than required by the lot development standards. For Lot 25 there are constraints posed by the presence of the wetland and its buffer zone to the northwest, and the stormwater detention to the northeast at the low point of the property. In addition, Engle Street terminates at the north and south property boundaries, but these street stubs are offset and along the south side of the subject property, there is a substantial grade change where the right-of-way terminates into the subject property, restricting the street layout pattern. A required future right-of-way dedication is present along the south side of the area of the multi-family development portion of the property. The application asserts that standard development constraints, location of stormwater facilities, vehicular access, and gridded street pattern all limit the lot area, width, and depth in the northeast corner of the property. The application emphasizes that the structure on Lot 25 is as far north as it possibly can be while limiting the amount of shadow cast upon the property to the north, and the application materials conclude noting that the side of the building that would benefit from the required buffer does not have windows or doors that would be impacted by a lack of a landscape buffer.

In staff's assessment, the buffer issue here seems to be tied to the angle of Engle Street in responding to the existing street termini locations to the north and south; the private street section adjacent to the four-plex reflects this angle but the building on Lot 25 is oriented parallel to the north property line, rather than responding to the angle of the streets, due to the solar access requirements. This results in the buffer on the north end of the building meeting the standard while on the south end the buffer for the building is pinched very close to the sidewalk. The pinched buffer area is still shown as accommodating a row of Blue Cascade Distyliums, a roughly four-foot tall/four-foot wide evergreen that should function to some degree as a buffer. In staff's view, the Exception here seems reasonable given site constraints, however the Commission may wish to consider whether to require the applicant to shift the northernmost parking area tree well three spaces to the north so that a tree is placed in front of the window to living space on the west wall, rather than a parked car that could direct headlights into this window (**see Staff Exhibit S-1 below**).

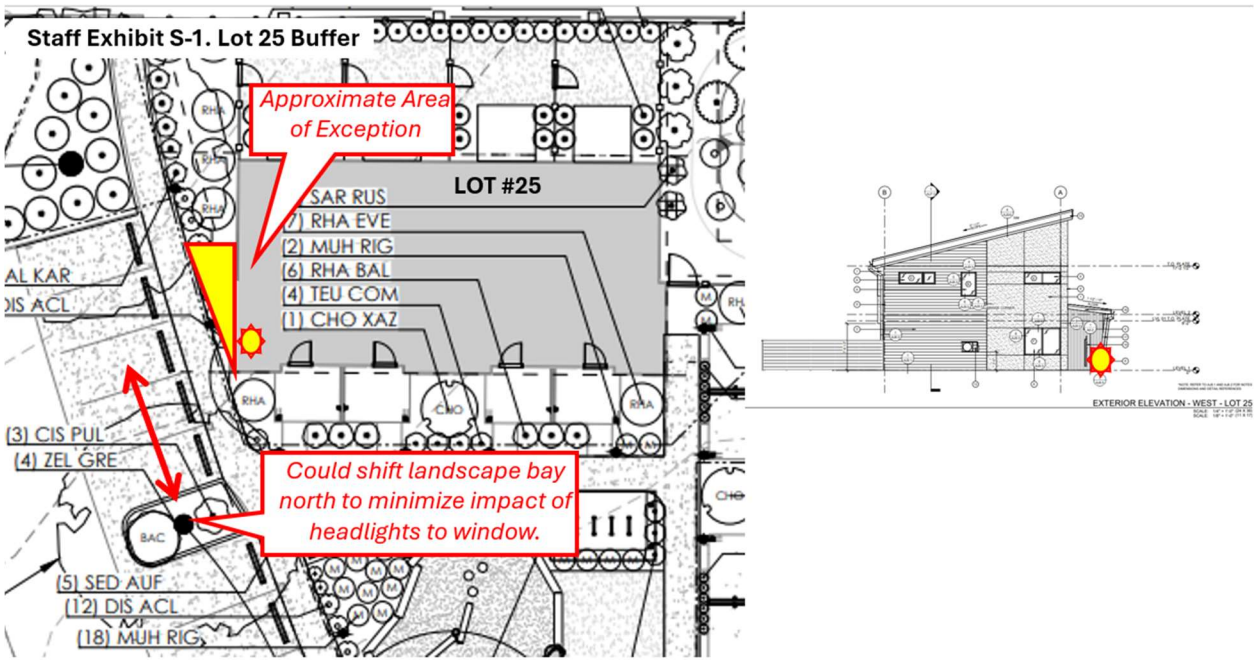

2) Solar Access Exception

Newly created lots must typically comply with Solar Access Standard A, which allows a property to shade the property to its north no more than the shadow that would be cast by a six-foot fence on the property line. In this case, Lot 25 was conditioned to provide calculations demonstrating compliance with Standard A prior to the issuance of a building permit, and the original staff report made clear that the property would need to comply with Standard A or request a Solar Access Exception.

Requests to depart from AMC 18.4.8.030 '*Solar Setbacks*' are subject to AMC 18.4.8.020.C.1 '*Solar Setback Exception*' which requires that the owners of all property to be shaded sign and record a release consenting to waive the solar access guaranteed by code for the specific structure proposed. The release is to include an exhibit clearly illustrating the specific proposed shading and must also hold the city harmless for any damages resulting from the waiver.

The application includes a request for a Solar Setback Exception to allow the northernmost four-plex building (Lot 25) to cast a greater shadow on the property to the north (2272 Dollarhide Way) than would be cast by a six-foot fence built on the property line. The application materials provided include a Memorandum of Understanding between the applicant and the owner of the property to the north agreeing to sign and record a Solar Access Exception agreement to allow the proposed shadowing once the subdivision is platted and tax lot numbers are formally assigned**.** A condition requiring that the required release form be signed, notarized and recorded and the recorded original returned to the city prior to the issuance of a building permit has been included in the recommended conditions below, as proposed by the applicant.

The approval of a Solar Access Exception also requires findings that:

i. *The exception does not preclude the reasonable use of solar energy (i.e., passive and active solar energy systems) on the site by future habitable buildings.*
ii. *The exception does not diminish any substantial solar access which benefits a passive or active solar energy system used by a habitable structure on an adjacent lot.*
iii. *There are unique or unusual circumstances that apply to this site which do not typically apply elsewhere.*

The application materials explain that the subject property is relatively flat, and although the four-plex proposed is two stories and 20 feet tall, it is located 20 feet from the north property line and slightly more than 42 feet from the adjacent structure on the property to the north and requires a Solar Setback Exception to shade the adjacent property to the north. The application materials emphasize that the proposed shadow does not fall upon the structure on the adjacent property and is instead limited to the rear yard and patio area.

Staff Exhibit S-2 below illustrates both the allowed shading that would be cast by a six-foot fence on the property line ('Standard A') and the additional shading proposed requiring the exception. This illustration is based on the applicant's submittals, and shows a 62-foot 3-inch wide shadow extending 8.625 feet north beyond the allowed shadow. The additional shading requested impacts the rear yard and patios of the Dollarhide Way property to the north, but based on the applicant's assertions and illustration does not impact the existing building on that property.

Staff Exhibit S-2. Solar Shadow Based on Applicant's Submittal

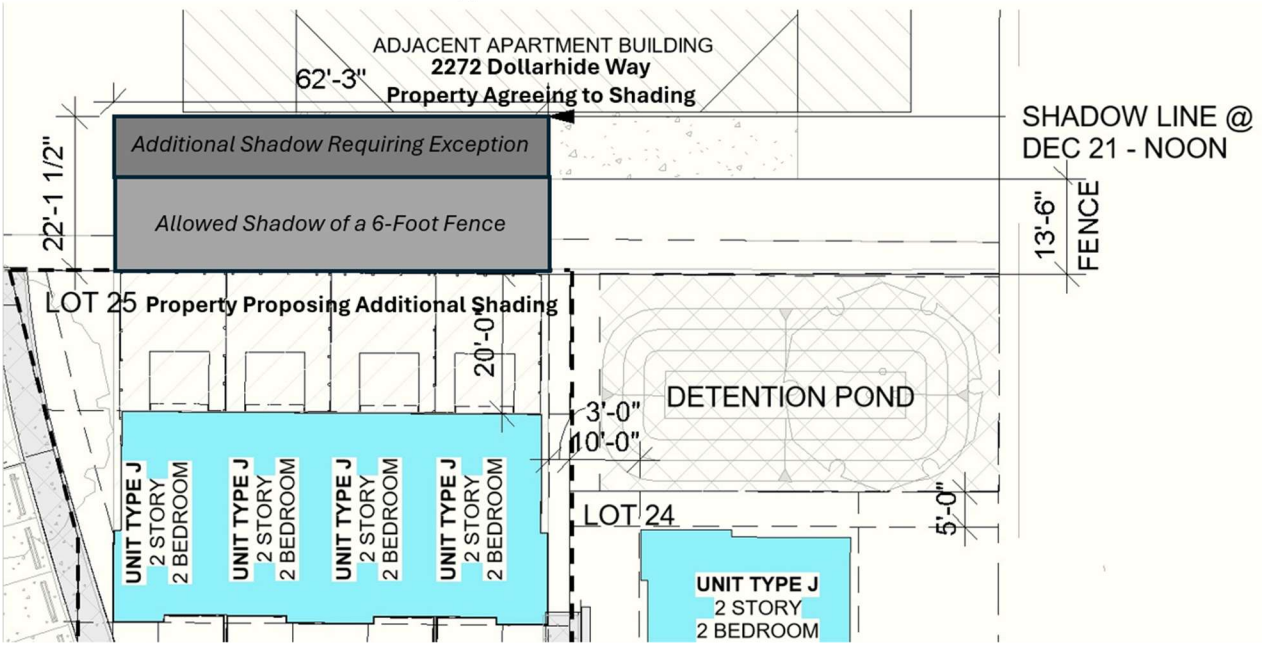

The rear yards and patio areas of the Dollarhide Way property to be shaded are shown in the photo below:

The application materials assert that the solar shadow cast by the proposed structure does not preclude the reasonable use of solar energy on the adjacent property by any future habitable buildings. The site to the north is built out with a six-unit apartment complex. The shadow cast by the proposed building does not impact the adjacent structure; the shadow falls within the required 20-foot rear yard area of that structure and only impacts the rear yard area and two westernmost patios.

The application asserts that the exception does not diminish any substantial solar access to a passive or active solar energy system used by the apartment building on the adjacent property, and does not impact the adjacent structure as the proposed shading is entirely within the required 20-foot rear yard area of the neighboring structure.

The application suggests that there are unique circumstances that apply to this site which do not apply elsewhere to the other development lots within the development, explaining that Lot 25 is constrained by the wetland and it's buffer, the stormwater detention facility, the angle of Engle Street, and how that determined the north/south lot dimension used for solar, as well as the setbacks and street orientation, and parking area location. The applicant further asserts that the intent of the Solar Ordinance is to preserve the value of "*solar radiation falling on structures, investments in solar energy systems, and the options for future uses of solar energy.*" The applicant concludes that the buildings are separated by 42 feet, a substantial separation in a suburban residential zone, and that the proposed structure's shadow does not fall upon the adjacent structure.

In staff's assessment, while the property is relatively flat the applicant has a number of issues to contend with including addressing the minimum density with annexation; responding to Engle Street as it relates to the subject property from the north and south while dealing with a substantial grade change at the south end; preserving the wetland; addressing stormwater at the low end of the site; and providing for a potential future east-west connection between Clay Street and Tolman Creek Road. Staff believe that a finding can be made that the site presents a number of issues which impact the available north-south developable area to comply with Solar Access, that the neighbor has agreed to the proposed shading and that the shadow cast will have minimal impact to the property to the north and will not impact the adjacent structure.

3) Public Input

Notice was posted at three locations around the parent property's perimeter (i.e. along the Clay Street frontage and at the end of each of the Engle Street stubs), and mailed to all properties of record within 200 feet of the subject property on September 24, 2025. *At the time of this writing no formal public comment has been received.*

III. Procedural – Approval Criteria

1) Site Design Review (AMC 18.5.2.050)

An application for Site Design Review shall be approved if the proposal meets the criteria in subsections A, B, C, and D below. The approval authority may, in approving the application, impose conditions of approval, consistent with the applicable criteria.

A. Underlying Zone. *The proposal complies with all of the applicable provisions of the underlying zone (part 18.2), including but not limited to: building and yard setbacks, lot area and dimensions, density and floor area, lot coverage, building height, building orientation, architecture, and other applicable standards.*

B. Overlay Zones. *The proposal complies with applicable overlay zone requirements (part 18.3).*

C. Site Development and Design Standards. *The proposal complies with the applicable Site Development and Design Standards of part 18.4, except as provided by subsection E, below.*

D. City Facilities. *The proposal complies with the applicable standards in section 18.4.6 Public Facilities, and that adequate capacity of City facilities for water, sewer, electricity, urban storm drainage, paved access to and throughout the property, and adequate transportation can and will be provided to the subject property.*

E. Exception to the Site Development and Design Standards. *The approval authority may approve exceptions to the Site Development and Design Standards of part 18.4 if the circumstances in either subsection 1, 2, or 3, below, are found to exist.*

1. *There is a demonstrable difficulty meeting the specific requirements of the Site Development and Design Standards due to a unique or unusual aspect of an existing structure or the proposed use of a site; and approval of the exception will not substantially negatively impact adjacent properties; and approval of the exception is consistent with the stated purpose of the Site Development and Design; and the exception requested is the minimum which would alleviate the difficulty;*

2. *There is no demonstrable difficulty in meeting the specific requirements, but granting the exception will result in a design that equally or better achieves the stated purpose of the Site Development and Design Standards; or*

3. *There is no demonstrable difficulty in meeting the specific requirements for a cottage housing development, but granting the exception will result in a design that equally or better achieves the stated purpose of section 18.2.3.090. (Ord. 3147 § 9, amended, 11/21/2017)*

2) Solar Access Exception (AMC 18.4.8.020.C)

C. Exceptions and Variances. *Requests to depart from section 18.4.8.030, Solar Setbacks, are subject to subsection 18.4.8.020.C.1, Solar Setback Exception, below. Deviations from the standards in section 18.4.8.050, Solar Orientation Standards, are subject to subsection 18.5.2.050.E, Exception to the Site Development and Design Standards.*

1. ***Solar Setback Exception.*** *The approval authority through a Type I review pursuant to section 18.5.1.050 may approve exceptions to the standards in 18.4.8.030, Solar Setbacks, if the requirements in subsection a, below, are met and the circumstances in subsection b, below, are found to exist.*

   a. *That the owner or owners of all property to be shaded sign, and record with the County Clerk on the affected properties' deed, a release form supplied by the City containing all of the following information:*

i. The signatures of all owners or registered leaseholders holding an interest in the property in question.

ii. A statement that the waiver applies only to the specific building or buildings to which the waiver is granted.

iii. A statement that the solar access guaranteed by this section is waived for that particular structure and the City is held harmless for any damages resulting from the waiver.

iv. A description and drawing of the shading which would occur.

b. The approval authority finds all of the following criteria are met.

i. The exception does not preclude the reasonable use of solar energy (i.e., passive and active solar energy systems) on the site by future habitable buildings.

ii. The exception does not diminish any substantial solar access which benefits a passive or active solar energy system used by a habitable structure on an adjacent lot.

iii. There are unique or unusual circumstances that apply to this site which do not typically apply elsewhere.

IV. Conclusion and Recommendations

The applicant has provided written findings addressing each of the approval criteria in detail, and by this reference they are incorporated herein as if set out in full. With the application materials fully considered, staff believe that findings can be made that all applicable ordinance requirements have been met.

Site Design Review for the four four-plexes proposed seems relatively straightforward, with the primary issues being created in responding to the presence of the small wetland, the need for stormwater detention at the lower end of the site, and the angle of Engle Street through the property in response to the location of the current segments to the north and south. In staff's view, both the Exception to the Site Development and Design Standards to allow a slightly reduced landscaped buffer adjacent to the building on Lot 25 and to allow a Solar Access Exception for Lot 25 to shade a portion of the rear yard area of the property to the north are relatively minor and satisfy the applicable criteria.

Staff recommend that the Planning Commission approve the application subject to conditions. If the Planning Commission concurs, staff recommend including the following conditions of approval below:

1) That all proposals of the applicant shall be conditions of approval unless otherwise specifically modified herein.

2) All applicable conditions of the previous land use approvals (Annexation, Outline and Final Plan approval) shall remain in place, including but not limited to that the applicant shall sign and record deed restriction agreements ensuring that any future development will occur in accord with the minimum required 90 percent of the subject properties' base density; that the development is in keeping with the approved development plan, as required in AMC 18.5.8.050.F; and that development of the property shall comply with the affordability requirements for annexations in AMC 18.5.8.050.G including which buildings will be reserved for affordable housing units reserved for those at or below 80-percent AMI. The applicant shall also sign and record a deed restriction agreement that the required utility infrastructure and street frontage improvements required of annexation shall be completed prior to issuance of any building permits. These agreements shall be signed and recorded in conjunction with recording of the final plat.

3) All exterior lighting shall be selected, placed and shrouded/directed on the property and shall not directly illuminate adjacent residential proprieties. Lighting details shall be included in the building permit submittals, and lighting compliance verified prior to the issuance of a certificate of occupancy.

4) The tree protection fencing and silt fencing to delineate the wetland water resource protection zone shall be installed prior to sitework and maintained in keeping with the approved plans for the duration of construction.

5) All fencing shall be consistent with the provisions of the "Fences and Walls" requirements in AMC 18.4.4.060, including but not limited to that any fences adjacent to common open space areas shall not exceed four feet in height. The location and height of all fencing shall be identified at the time of building permit submittals, and separate fence permits shall be obtained prior to installation.

6) Permits shall be obtained from the Ashland Public Works Department prior to any work in the public rights of way.

7) That a final Fire Prevention and Control Plan addressing the General Fuel Modification Area requirements in AMC 18.3.10.100.A.2 of the Ashland Land Use Ordinance shall be provided prior to bringing combustible materials onto the property, and any new landscaping proposed shall comply with these standards and shall not include plants listed on the Prohibited Flammable Plant List per Resolution 2018-028.

8) Building permit submittals shall include:

a. Identification of all easements, including public and private utility easements, mutual access easements, public pedestrian or bicycle access easements, drainage or irrigation easements, and fire apparatus access easements.

b. Solar setback calculations demonstrating that all new construction complies with the applicable solar setback requirements for each lot, including elevations or cross section drawings clearly identifying the highest shadow producing point(s) and their height(s) from natural grade.

c. Lot coverage calculations for each lot including all building footprints, driveways, parking, and circulation areas. Lot coverage shall be limited to no more than 35 percent as required for the R-1-3.5 zoning district in AMC 18.2.5.030.

d. Storm water from all new impervious surfaces and runoff associated with peak rainfalls must be collected on site and channeled to the City storm water collection system (i.e., curb gutter at public street, public storm pipe or public drainage way) or through an approved alternative in accordance with Ashland Building Division policy BD-PP-0029. On-site storm water collection systems shall be detailed on the building permit submittals.

e. A signed, notarized and recorded Solar Access Exception Release Form signed by the impacted property owners from 2272 Dollarhide Way.

f. Inverted u-racks shall be used for the bicycle parking. All bicycle parking shall be installed in accordance with the bicycle parking standards in AMC 18.4.3.070.. The building permit submittals shall verify that the bicycle parking spacing and coverage requirements are met in accordance with 18.4.3.070, and bicycle parking compliance shall be verified prior to final project approval or the issuance of a certificate of occupancy.

9) Prior to issuance of a building permit:

a. Final landscaping and irrigation plans including irrigation details satisfying the requirements of the Site Design and Use Standards Water Conserving Landscaping Guidelines and Policies shall be provided for the review and approval of the Advisor.

b. That the plans submitted for the building permit shall be in substantial conformance with those approved as part of this application. If the plans submitted for the building permit are not in substantial conformance with those approved as part of this application, an application to modify this Site Review approval shall be submitted and approved.

c. That storm water from all new impervious surfaces and runoff associated with peak rainfalls must be collected on site and channeled to the City storm water collection system (i.e., curb gutter at public street, public storm pipe or public drainage way) or through an approved alternative in accordance with Ashland Building Division policy BD-PP-0029. On-site collection systems shall be detailed on the building permit submittals.

d. That exterior building materials and paint colors shall be consistent with those described in the application and compatible with the surrounding area, and sample exterior building colors shall be provided with the building permit submittals for review and approval of the Staff Advisor. Very bright or neon paint colors shall not be used in accordance with the Residential Development standards in AMC 18.4.2.030.E.

10) Prior to final project approval or the issuance of a certificate of occupancy:

a. All exterior lighting shall be directed on the property and shall not directly illuminate adjacent proprieties. Lighting compliance shall be demonstrated in the building permit submittals and verified prior to occupancy.

b. All required bicycle parking shall be installed according to the approved plan, inspected and approved by the Staff Advisor.

c. All hardscaping, landscaping and irrigation shall be installed according to the approved plan, and tied into the existing irrigation system, inspected and approved by the Staff Advisor prior to final project approval or the issuance of a certificate of occupancy.

d. The screening for the trash and recycling enclosure shall be installed in accordance with the Site Design and Use Standards prior to final project approval or the issuance of a Certificate of Occupancy. An opportunity to recycle site of equal or greater size than the solid waste receptacle shall be included in the trash enclosure in accordance with AMC 18.4.4.040.

Applicant Submittal

Caldera Oaks Subdivision

Multi-Family Site Design Review

Bentella LLC

ROGUE PLANNING & DEVELOPMENT SE

Site Design Review for Multi-Family Development
And Solar Setback Waiver

Subject Property

Property Address: 300 Clay Street
Proposed Lots 22, 23, 24 & 24 of Phase 1, Caldera Oaks Subdivision

Map & Tax Lot: 39S 1E 11CB Tax Lot: 1100

Property Owner: Bentella LLC
7184 Aviara Dr.
Carlsbad, CA 92011

Architectural Design: KSW Architects
66 Water Street, Suite 100
Ashland, OR 97520

Land Surveying: Terra Surveying Inc.
274 Fourth Street
Ashland, OR 97520

Civil Engineering: Powell Engineering & Consulting
100 E. Main Street, Suite O
Medford, OR 97501

Landscape Architecture: Terrain Landscape Architecture
310 Oak Street, Unit #3
Ashland, OR 97520

Land Use Consultation: Rogue Planning & Development Services
1314-B Center Dr., PMB #457
Medford, OR 97501

PROJECT PROPOSAL:

A request for Site Design Review to allow for the development of four four-plex structures, each on an individual development lot within the new subdivision, Caldera Oaks Subdivision, a recently annexed property at 39S 1E 11CB; Tax Lot: 1100, 300 Clay Street. The Subdivision application has been applied for, and the process of public infrastructure plan review has commenced.

The multi-family development is part of Phase 1 of the subdivision development.

Each four-plex consists of four two-story units. The end units are 886 square feet, and the middle two units are 861 square feet. Each unit is proposed to be a two-bedroom with two bathrooms. The gross habitable floor area of each four-plex structure is 3,494 square feet.

Of the 16 apartments, 8 units within two buildings will be deed-restricted affordable housing rented to individuals whose incomes are 80 percent of the Area Median Income (AMI) and meet income qualification standards as set forth by the city of Ashland.

A solar waiver is necessary; the property owners to the north have agreed to the solar setback waiver.

PROPERTY DESCRIPTION:

The parent parcel is a recently annexed 4.80-acre parcel (PA-T3-2024-00010), located on the east side of Clay Street. The property has 328.35 feet of frontage along Clay Street and extends 633.61 feet to the west.

The parent parcel is 64.70 feet south of Dollarhide Way, an east-to-west public street that connects to Abbott Avenue. The property is 515.86 feet north of Villard Street, which terminates at Engle Street. Engle Street is a public street that terminates at the north and south lot lines of the parent parcel.

With the subdivision infrastructure, Phase 1 extends Engle Street north and south through the development. The new street, Caldera Drive, is an east-to-west extending street that will intersect with the extension of Engle Street.

A private driveway developed similar to a public street with landscaped parkrow, a sidewalk, curb, gutter, and travel lanes

that allow for two-way traffic, emergency vehicle access, parking area for the multi-family development.

DETAILED PROPOSAL:

The request is to construct four four-plex structures for a total of 16 new dwelling units. The area of the four-plexes, excluding the common areas that are part of the subdivision, such as the play area common space, the stormwater detention facility, and the private street area, is 21,120 square feet.

The four structures are each 60 feet by 20 feet with a footprint area of 1,740 square feet. The total footprint area of the four-plex buildings is 6,960 square feet.

Each four-plex consists of four two-story units. The end units are 886 square feet, and the middle two units are 861 square feet. Each unit is proposed to be a two-bedroom with two bathrooms. The gross habitable floor area of each structure is 3,494 square feet.

As part of the Performance Standards Subdivision proposal, each structure is proposed upon a parcel of land, Lots 22, 23, 24, and 25. Each structure complies with the perimeter setbacks of the zone with a 10-foot per-story rear yard setback adjacent to the east property line of the parent parcel of the subdivision. The setback from the future public right of way on the south side is 10 feet, as required for side yards abutting a public right of way. The setbacks internally between the buildings comply with the standards from the Performance Standards Subdivision, which allows for the setbacks to be based upon the separation between buildings. The structures on Lots 22 and 23 will shade the adjacent structure to the north, not more than five feet above the finished floor of the building to the north. The proposed structure on Lot 25 exceeds the maximum solar shadow allowed. The property owner to the north has agreed to a solar setback waiver to allow for the additional shading.

The proposal conforms to the allowed density. With the subdivision proposal, the permitted density of the parent parcel is 34.48 dwellings, including the allowed density bonus to increase the number of dwellings. The allowed density within the subdivision was 37. The 16 multi-family units are part of the permitted density.

The proposed buildings are similar in architectural appearance and materials used on the properties in the vicinity and those proposed within the subdivision.

Solar Setback Waiver:

The property is relatively flat, and although a two-story, four-plex is proposed, located 20 feet from the north property line, 42 feet from the adjacent structure to the north, and only 20 feet tall, it requires a solar setback waiver to shade the adjacent property to the north. The shadow does not fall upon the structure on the adjacent property and is within the yard and rear patio area.

Parking:

There are 37 on-street parking spaces provided on the public street and within the common area of the development on the private street to comply with the parking requirements for the Performance Standards Subdivisions. There are 15 additional, voluntarily provided parking spaces. This is less than the allowed maximum of two per unit or 32 vehicle parking spaces.

The proposed parking area complies with the minimum landscape requirements and the Climate-Friendly and Equitable Community Standards for the development of parking areas. At least 40 percent, eight of the parking spaces within the multi-family parking area, will be wired for future electric vehicle charging stations. Additional shade trees to provide shading of more than 30 percent of the parking area and driveway aisles are proposed.

Bicycle Parking:
There are two bicycle parking structures proposed. These structures accommodate 16 bicycle parking spaces in covered, secure racks. There are also bike hangers to hang a bike by its wheel on the patio firewall near the entrance of each dwelling unit.

Open Space:
The area of the four-plexes, excluding the common areas that are part of the subdivision, such as, the play area common space, the stormwater detention facility, and the private street area, is 21,120 square feet. The required area of open space is 1,689.6 square feet. Each unit has a large private open space that includes a 10-foot X 10-foot front entry, a 10-foot by 10-foot patio, and a rear yard area. The rear yard and patio area account for 4,790 square feet of private outdoor space, approximately 300 square feet per unit. This is in addition to the 14,450 square feet provided within the subdivision. The area of common and private outdoor space greatly exceeds the minimum required.

Affordable Housing:
The proposal includes the construction of eight affordable rental units restricted to households earning 80 percent of the Area Median Income (AMI). Each 80 percent AMI unit has an equivalency value of 1.25, meaning that to determine the number of units required to meet the affordability standard, the required number of units (9) is divided by the equivalency value (1.25). This calculation (9 / 1.25) results in 7.2, which rounds up to 8. Therefore, to meet the requirement of nine affordable units, the project must provide at least eight affordable units at 80 percent AMI.

The eight (8) affordable rental units will be restricted to households earning 80 percent of the AMI, which satisfies the requirement under AMC 18.5.8.050.G.

Affordable housing will be developed to meet the standards outlined in AMC 18.2.5.050. Each unit is more than 800 square feet and has two bedrooms. The materials, exterior architecture and materials will be substantially similar to the market rate units.

Public Infrastructure:
The public infrastructure plans are in review as part of the Caldera Oaks Subdivision Final Plan. The utility plans detail the extension of public infrastructure to serve the proposed dwelling units. These include an extension of the electric infrastructure. Water meters, sanitary sewer connections, and stormwater connections that comply with the Rogue Valley Stormwater Quality Design Manual standards are proposed. The utility extensions and connections were designed by civil engineers.

Conclusion:
The requested approval of the site design review for the development of four, four-plex multi-family apartment dwellings is consistent with the proposed annexation and the Performance Standards Subdivision approval. The property is zoned suburban residential which allows for both attached, detached, and multi-family housing. The proposal provides for additional dwellings as envisioned in the zone and by the comprehensive plan designation of the zone. The proposal provides eight deed-restricted affordable housing units.

Findings of fact addressing the criteria from the Ashland Municipal Code are provided on the following pages. For clarity, the criteria are in Times New Roman and the applicant's responses are in Calibri.

FINDINGS OF FACT

Site Design Review – AMC 18.5.2
Multi-Family Site Design Review
18.5.2.020
B. Residential Uses. Site design review applies to the following types of residential uses and project proposals, pursuant to section 18.5.2.030, Review Procedures:

1. Three or more dwelling units on a lot in a residential zone, and one or more dwelling units on a lot in any other nonresidential zone.

Finding:
There are more than three dwellings proposed on each residential lot. There are four dwellings proposed. Each structure is 3,494 square feet in area, and there are four structures.

Site Design Review Approval Criteria
18.5.2.050
A. Underlying Zone. The proposal complies with all of the applicable provisions of the underlying zone (part 18.2), including but not limited to: building and yard setbacks, lot area and dimensions, density and floor area, lot coverage, building height, building orientation, architecture, and other applicable standards.

Finding:
The property is within the R-1-3.5, Suburban Residential Zone. The proposal complies with and exceeds all required setbacks for the perimeter of the parent parcel, and with the Performance Standards Subdivision separation between building standards.

There are four four-plex residential dwellings proposed for each lot. The proposal conforms to the allowed density in the zone, and the 16 units are included in the density calculations for the subdivision.

The structures are less than 35 feet tall, the maximum height in the zone.
The proposed density is consistent with the density of the residential annexation and the approved Outline Plan for the Performance Standards Subdivision.

Between the units, there is enough setback to allow only the solar performance standard that allows shading of not more than five feet up the wall of the adjacent structure. The structures on Lots 22 and 23 will shade the adjacent structure to the north, not more than five feet above the finished floor of the building to the north. The proposed structure on Lot 25 exceeds the maximum solar shadow allowed. The property owner to the north has agreed to a solar setback waiver to allow for the additional shading. Additional findings addressing the solar setback waiver are found on the following pages.

The proposed architecture is consistent with the overall aesthetic of the subdivision. The materials and design elements reflect the existing neighborhood by incorporating varied façade treatments, such as reveals, recesses, trim, and thoughtful placement of windows. Each dwelling will also possess a strong sense of entry, ensuring that the architecture complements the community's overall aesthetic. This thoughtful design approach meets the standards outlined in the ordinance and aligns with the vision established in the approved Outline Plan

Except for a modified roofline for Building 25 to address solar, each of the four plex buildings has the same materials, windows, doors, finishes, exterior bike hanger, covered entry, and covered rear patio with association-maintained lawn area. The property owner is the contractor and intends to retain ownership of the eight affordable housing units.

The existing and proposed coverages have been scrutinized, and the total coverage of each of the multi-family lots is proposed to be less than 65 percent, as allowed in the zone. Each of the apartment units has a large, 20-foot rear yard with a 10-foot patio. Between the four plex units on Lots 23, 23 and 24, there is 35 feet, increasing the amount of green space and open areas of the multi-family areas of the property.

As required by ordinance and as conditioned in the Annexation, and other applicable standards for multi-family development have been met with this application or can be met with the imposition of conditions.

B. Overlay Zones. The proposal complies with applicable overlay zone requirements (part 18.3).

Finding:
The property is within the Wildfire Hazards overlay. A Fire Prevention and Control Plan has not been submitted with the application materials because the property, once mowed, complies with the requirements for wildfire hazards abatement. The fuel modification area has been implemented before the installation of public or private utilities and site improvements. The landscape plan does not introduce any vegetation that is on the city of Ashland's Prohibited Plant list.

Compliance with the Water Resources Protection Zone was demonstrated at the Outline and Final Plan, and the project's Civil Engineering plans account for required buffering and utility construction to assure compliance with the previous approval. Additional findings are not provided as part of this application.

C. Site Development and Design Standards. The proposal complies with the applicable Site Development and Design Standards of part 18.4, except as provided by subsection E, below.

18.4.2.030 Residential Development
Finding:

The proposed four-plex structures are accessed via a private street that extends from Caldera Drive. The fourplex structures are set back more than 20 feet from the public street.

A large open space (common area) is between the parking area and the buildings. The units are oriented towards the landscaped common area with walkways leading from the unit entrances through the common area to the parking area and out to the public street.

There are no garages with the four-plex units.

Building materials, colors, and architectural designs are compatible with the units proposed within the Caldera Oaks Subdivision and other developments in the area. No bright or neon paint colors are proposed.

The recycling and refuse disposal areas are to be screened with a site-obscuring fence or solid wall that is at least five feet tall and a solid gate to prevent view of the recycling/refuse area.

The area of the four-plexes, excluding the common areas that are part of the subdivision, such as the play area common space, the stormwater detention facility, and the private street area, is 21,120 square feet. The required area of open space is eight percent (1,689.6 square feet).

Each unit has a large private open space that includes a 10-foot X 10-foot (100 square feet) covered front entry, an 8.25-foot by 10-foot patio, and a fenced rear yard area. The patio and rear yard are accessed directly by a door from the interior of the unit. The rear yard and patio areas account for 4,790 square feet. Approximately 300 square feet per unit is proposed. Between buildings 22 and 23, and 24, there is an additional area of 35 feet X 61 feet (2,135 square feet) that is a landscaped, eco lawn area.

The open space area provided in conjunction with the multi-family development accounts for 6,925 square feet. This is in addition to the 14,450 square feet provided within the subdivision. The area of common and private outdoor space greatly exceeds the minimum required. The total area of open space is 21,375 square feet. According to the standards, when subject to Site Design Review and Performance Standards Option, eight percent of the total lot area is required. This proposal provides for over nine percent open space.

There are pedestrian connections proposed through the development, leading to the entry of each unit and through the active recreation common areas. The private common areas at the rear of each unit will be fenced for privacy with a maintenance access gate through each yard.

All open space areas designated for active use will have lawn or Eco lawn, picnic and play areas that are sloped at less than five percent.

The common open space area contains a covered bicycle parking structure, benches, and tables. None of the structures is enclosed.

The fences abutting the subdivision common areas, including the stormwater detention swale, will have fences that comply with the standards from 18.4.4060 and not be taller than four feet. The fences between the multi-family units will be six-foot-tall privacy fencing.

A detailed landscape and irrigation plan demonstrating compliance with AMC 18.4.030 has been provided.

Each dwelling unit is more than 12 feet from any recycling/refuse disposal area.

Parking, Access, and Circulation

The proposed development provides a circulation system that accommodates all expected traffic on-site. The on-site circulation system (private street) incorporates street-like features such as sidewalks and shade trees.

The proposed parking area does not exceed the maximum allowed number of voluntarily provided parking spaces. Where a maximum of 32 spaces could be provided, there are 15 spaces provided in a 20-space parking area. Five of the spaces are required on-street or common area parking necessary for each lot in a new subdivision.

The parking area includes an ADA accessible van parking space and offloading zone. All parking spaces comply with the minimum dimensional standards for width, depth and back-up maneuvering area.

The parking area has been designed to minimize adverse environmental impacts with the use of shade from the tree canopy over the parking area surface and a light colored surface. The parking area has been designed so that the stormwater is captured and treated through landscape medians.

The parking area is less than ½ acre in area. The parking area landscape plan and tree planting plan have been prepared by a licensed landscape architect. The shade trees are selected from the Parking Lot Tree list. The trees are proposed to be planted and maintained to maximize their root health and chances of survival in accordance with the ANSI A3000 standards. There is a seven percent landscape area directly adjacent to the parking area within the landscape island and in the common area abutting the parking area.

A continuous, five-foot-wide, concrete-surfaced walkway system extends through the site and connects all phases of development, common areas, parking areas, and building entries.

All portions of the site not otherwise developed with buildings, vehicle maneuvering and parking, and other hardscape areas are landscaped in accordance with the standards from AMC 18.4.4.030. Each lot of the multi-family development has less than 54 percent coverage, allowing more than 64 percent landscape coverage.

The landscape plan uses plants appropriate for the local climate, exposure, and water availability. The plan includes a variety of deciduous, evergreen trees and shrubs, and ground covers.

An exception to the screening standards for parking areas is required because the parking area generally abuts the common area. Adjacent to Lot 25, the building is separated from the parking area by five feet. An exception to AMC 18.4.4.030.F.2.b. Screening Adjacent to a Residential Building is requested. There is not enough room for an eight-foot setback and a continuous hedge screen.

Tree Preservation, Protection, and Removal

Tree removal and tree protection were approved as part of the Final Plan application. The tree protection fencing will be installed according to the plan before site disturbance for the construction of the multi-family dwellings. There are a substantial number of mitigation trees proposed as part of the site redevelopment to replace the canopy lost through the tree removal.

D. City Facilities. The proposal complies with the applicable standards in section 18.4.6 Public Facilities, and that adequate capacity of City facilities for water, sewer, electricity, urban storm drainage, paved access to and throughout the property, and adequate transportation can and will be provided to the subject property.

Finding:

The property is served by urban-level public facilities. The proposal includes the extension of all necessary services for the public street infrastructure to serve all future dwellings.

The proposed utility extensions are shown on Civil Engineering Sheets. Detailed stormwater retention, detention, and treatment plans have been submitted for review and approval.

E. Exception to the Site Development and Design Standards. The approval authority may approve exceptions to the Site Development and Design Standards of part 18.4 if the circumstances in either subsection 1, 2, or 3, below, are found to exist.

Finding:
Adjacent to Lot 25, the building is separated from the parking area by a five-foot-wide sidewalk and no buffer. An exception to AMC 18.4.4.030.F.2.b. Screening Adjacent to a Residential Building is requested to eliminate the landscape buffer.

1. There is a demonstrable difficulty meeting the specific requirements of the Site Development and Design Standards due to a unique or unusual aspect of an existing structure or the proposed use of a site; and approval of the exception will not substantially negatively impact adjacent properties; and approval of the exception is consistent with the stated purpose of the Site Development and Design; and the exception requested is the minimum which would alleviate the difficulty;

   Finding:
   The site layout from the first iterations of the subdivision has been dictated by the site constraints present upon the subject property created by the natural feature, and the physical site development constraints created by the adjacent developments to the north and south, which determined the street layout of the subject property. The nearly level property and the solar ordinance dictate that the lots be oriented north/south, or be substantially wider than required by the lot development standards.

   This lot in particular is constrained by a wetland and its buffer zone on one side, the stormwater treatment facility on the other.

   Engle Street terminates at the north and south property boundaries, but where it connects to the north and south property lines is offset. Along the south side of the subject property, Engle Street has a substantial grade change where the right-of-way terminates into the subject property, restricting the street layout pattern. A required future right-of-way dedication is present along the south side of the area of the multi-family development portion of the property. A delineated wetland is present along the north property boundary near the terminus of Engle Street.

   Standard development constraints, location of stormwater facilities, vehicular access, and gridded street pattern all further limit the lot area, width, and depth in the northeast corner of the property.

   This structure is a far north as it possibly can be to limit the amount of shadow cast upon the property to the north.

   This side of the building does not have windows or doors that would be impacted by a lack of a landscape buffer.

2. There is no demonstrable difficulty in meeting the specific requirements, but granting the exception will result in a design that equally or better achieves the stated purpose of the Site Development and Design Standards; or

Finding:
There is demonstrable difficulty in meeting the standards of the specific requirements.

3. There is no demonstrable difficulty in meeting the specific requirements for a cottage housing development, but granting the exception will result in a design that equally or better achieves the stated purpose of section 18.2.3.090.

Finding:
Not applicable

Solar Setback Exception 18.4.8.020.C.
Requests to depart from section 18.4.8.030, Solar Setbacks, are subject to subsection 18.4.8.020.C.1, Solar Setback Exception, below. Deviations from the standards in section 18.4.8.050, Solar Orientation Standards, are subject to subsection 18.5.2.050.E, Exception to the Site Development and Design Standards.

1. Solar Setback Exception. The approval authority through a Type I review pursuant to section 18.5.1.050 may approve exceptions to the standards in 18.4.8.030, Solar Setbacks, if the requirements in subsection a, below, are met and the circumstances in subsection b, below, are found to exist.

a. That the owner or owners of all property to be shaded sign, and record with the County Clerk on the affected properties' deed, a release form supplied by the City containing all of the following information:

i. The signatures of all owners or registered leaseholders holding an interest in the property in question.
ii. A statement that the waiver applies only to the specific building or buildings to which the waiver is granted.
iii. A statement that the solar access guaranteed by this section is waived for that particular structure and the City is held harmless for any damages resulting from the waiver.
iv. A description and drawing of the shading which would occur.

Finding:
Signatures of all owners holding an interest in the adjacent property in question are ready to be provided when the survey plat for the Caldera Oaks Subdivision is recorded and the subject property requesting the solar setback waiver (Lot 25) has its own legal description and deed to which the solar waiver can be recorded. There is a Memo of Understanding between the

Executive Director of Access, Inc. and the property owner Bentella, LLC. There is a statement that the waiver only applies to the specific building, there is a drawing of the proposed shading, and that the city is held harmless for any damages caused by the solar waiver. The draft solar waiver agreement and required attachments are submitted with this application. A condition of approval that the waiver be recorded prior to issuance of the building permit for vertical construction of the building on Lot 25 is proposed by the applicant.

b. The approval authority finds all of the following criteria are met.

i. The exception does not preclude the reasonable use of solar energy (i.e., passive and active solar energy systems) on the site by future habitable buildings.

Finding:
The solar shadow cast by the proposed structure does not preclude the reasonable use of solar energy on the adjacent property by any future habitable buildings. The site to the north is built out with a six-unit apartment complex. The shadow cast by the proposed building does not impact the adjacent structure, and the shadow falls within the required 20-foot rear yard area of that structure. The solar shadow only impacts the western two patios of the structure and not the majority of the units.

ii. The exception does not diminish any substantial solar access which benefits a passive or active solar energy system used by a habitable structure on an adjacent lot.

Finding:
The proposed solar exception does not diminish any substantial solar access to a passive or active solar energy system used by the apartment building on the adjacent property. The shadow cast by the proposed building does not impact the adjacent structure, and the shadow falls within the required 20-foot rear yard area of that structure.

iii. There are unique or unusual circumstances that apply to this site which do not typically apply elsewhere.

Finding:
There are unique circumstances that apply to this site that do not apply elsewhere to the other development lots within the development. This particular lot is constrained by the wetland, the wetland buffer, the stormwater detention facility, the parking area, the angle of Engle Street, and how that determined the north/south lot dimensions, setbacks, street orientation, and parking area location.

Though the required solar setback is applied to the property line, the intent of the ordinance, as expressed in the adopting language, and within the purpose statement of the Solar Access Chapter (AMC 18.4.8.010), seeks to preserve the value of "solar radiation falling on structures, investments in solar energy systems, and the options for future uses of solar energy". There is 42 feet of separation between the structures, a substantial separation in a suburban residential zone. The proposed structure's shadow does not fall upon the adjacent structure. The agreed-upon solar setback waiver does not prevent solar radiation from falling upon the adjacent structure; it does not fall upon an existing solar energy system. Granted, we cannot predict future solar energy collection system locations, but it is unlikely to be installed on the ground in the rear yard of the Access apartment units.

The subject property (area of multi-family development) has lost 27 feet along the south boundary due to the required future right-of-way dedication area. There is an additional setback along this future street area of 10 feet. This pushed the developable area for the multi-family units to the north.

To preserve the "frontage" of the units on Lot 24 and allow the play area to be centralized, Unit 25 was not rotated parallel to Lot 24 within the centralized play area. This would have required the open space and play area on the north side of Lot 25, out of sight of the majority of the units, not at the front doors of the apartment units, and in the shade of the units.

The site layout of the public streets, private driveway, wetland, storm water facilities on the low side of the property, future right of way, and its impacts to the available north/south development area, better site layout and design of functional open space and play area, all contribute to the need for the solar waiver. The proposal does not have a negative impact upon the adjacent structure for which the solar ordinance was intended to protect.

Attachments:
Draft Solar Setback Agreement
Solar Setback Attachments
Architectural Site Plan
Architectural Plan Set
Multi-Family Area Landscape Plan Set

SITE - PLAN (1)

SCALE: 1" = 30'-0" (24 X 36)
SCALE: 1" = 60'-0" (11 X 17)

SCALE: 1" = 30'

15'-0" 30'-0" 60'-0" 120'-0"

ZONING INFORMATION

BASE ZONE: R-1-3.5 (RESIDENTIAL - SUBURBAN)

OVERLAY ZONES:

SPECIAL DISTRICTS:

MAP & TAX LOT: 391E11CB - 1100

ACERAGE: 4.8 ACRES (209,088 SF)

LEGEND - SITE PLAN

ASPHALT

CONCRETE

LANDSCAPE

AUTOMOBILE PARKING

ON-STREET PARKING = 52 SPACES
OFF-STREET SURFACE PARKING = 14 SPACES
OFF-STREET GARAGE PARKING = 35 SPACES
TOTAL - 101 SPACES

SITE AREA

SITE AREA = 209,088 SF

OPEN SPACE

	2,934 SF
	1,414 SF
	3,782 SF
	7,972 SF
TOTAL	16,102 SF

16,102 / 209,088 = .077 = 7.7%

Neighborhood Street - Figure 18.4.6.040.G.4.b

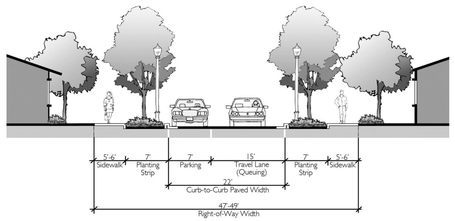

Shared Street - Figure 18.4.6.040.G.8

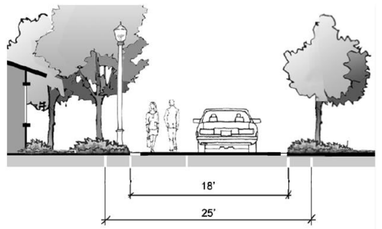

Alley - Figure 18.4.6.040.G.6

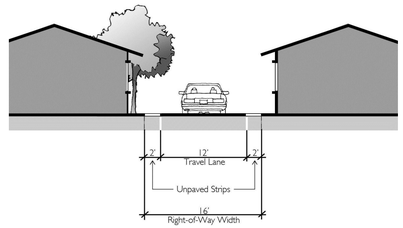

MULTIFAMILY LOT COVERAGE

LOT 22
LOT AREA: 5,439 SF
COVERAGE: 2,393 SF
% OF LOT AREA: 44%

LOT 23
LOT AREA: 5,839 SF
COVERAGE: 2,393 SF
% OF LOT AREA: 41%

LOT 24
LOT AREA: 5,433 SF
COVERAGE: 2,393 SF
% OF LOT AREA: 44%

LOT 24
LOT AREA: 4,424 SF
COVERAGE: 2,393 SF
% OF LOT AREA: 54%

ksw ARCHITECTS

CALDERA OAKS

DESIGN DEVELOPMENT

07.21.2025

SITE PLAN & ZONING SUMMARY A1

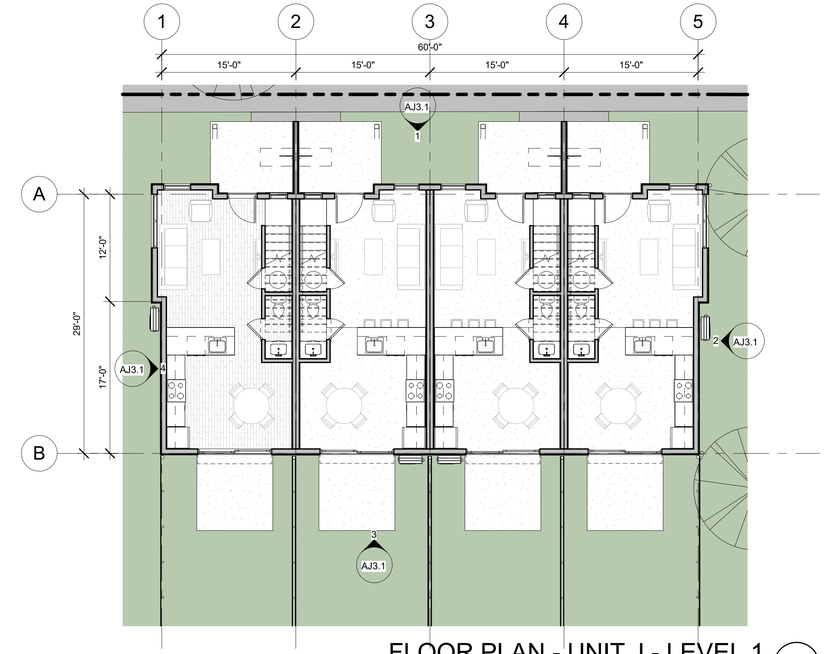

FLOOR PLAN - UNIT J - LEVEL 1 (1)

1/8" = 1'-0"

454 S.F. PER END UNIT
441 S.F. PER MID UNIT

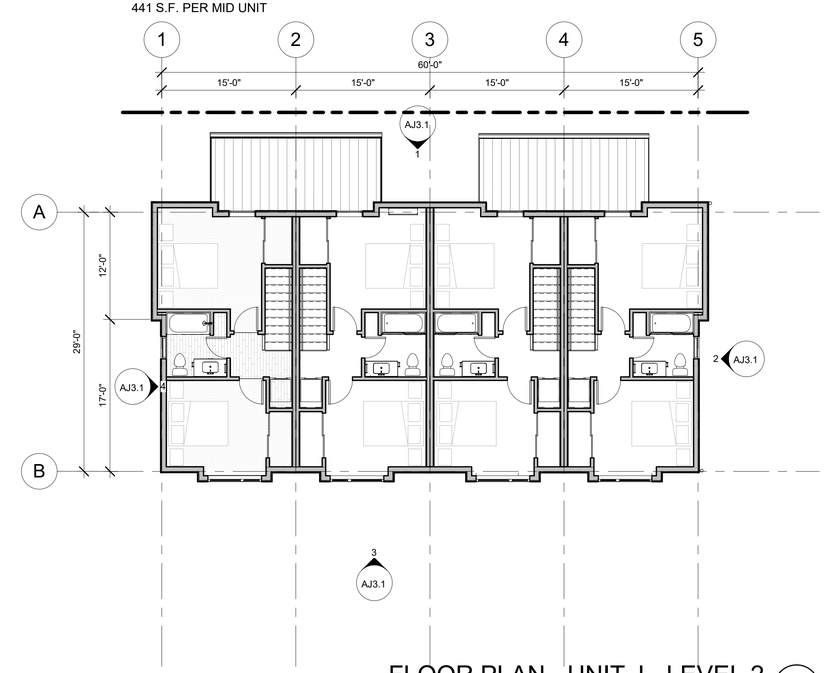

FLOOR PLAN - UNIT J - LEVEL 2 (2)

1/8" = 1'-0"

432 S.F. PER END UNIT
420 S.F. PER MID UNIT

SCALE: 1/4" = 1'-0"

2'-0" 4'-0" 8'-0" 16'-0"

454 S.F.	FIRST FLOOR (END UNITS)
432 S.F.	SECOND FLOOR (END UNITS)
886 S.F.	TOTAL

441 S.F.	FIRST FLOOR (MID UNITS)
420 S.F.	SECOND FLOOR (MID UNITS)
861 S.F.	TOTAL

ksw ARCHITECTS

CALDERA OAKS

DESIGN DEVELOPMENT

07.02.2025

UNIT J AJ1.0

SIDE ELEVATION - UNIT J (2)
1/4" = 1'-0"

FRONT ELEVATION - UNIT J (1)
1/4" = 1'-0"

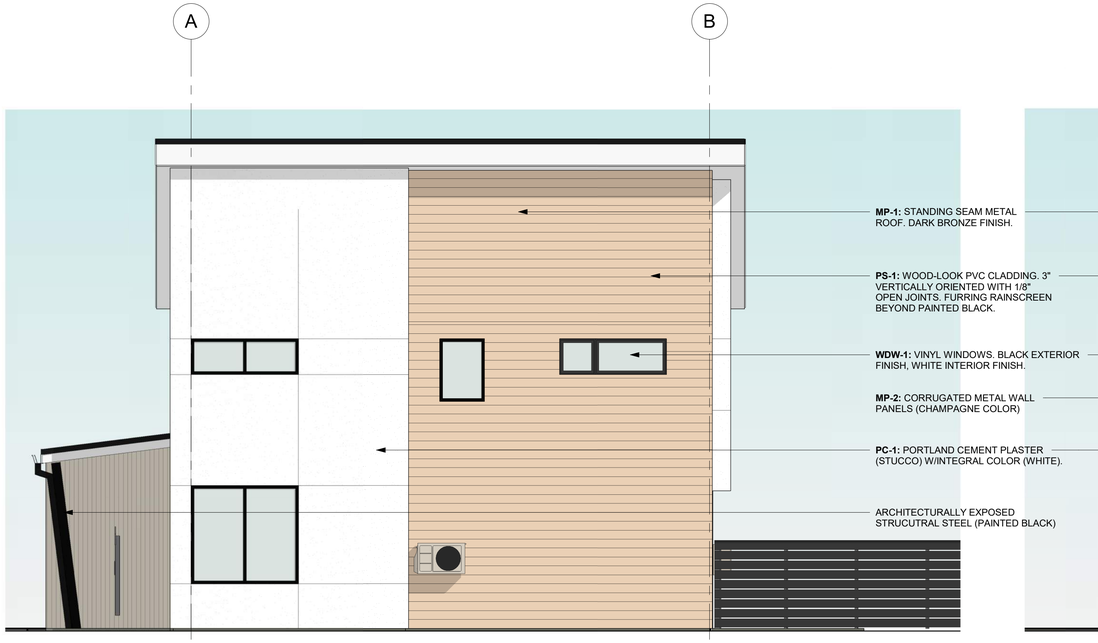

SIDE ELEVATION 2 - UNIT J (4)
1/4" = 1'-0"

REAR ELEVATION - UNIT J (3)
1/4" = 1'-0"

ksw ARCHITECTS

CALDERA OAKS

DESIGN DEVELOPMENT

07.02.2025

SCALE: 1/4" = 1'-0"

2'-0" 4'-0" 8'-0" 16'-0"

UNIT J AJ3.1

CALDERA OAKS: BUILDING J

BENTELLA LLC

ksw ARCHITECTS

66 WATER STREET
SUITE 101
ASHLAND, OR
97520
TEL.: 541.488.8200

CONSTRUCTION DOCUMENTS

CALDERA OAKS: BUILDING J

BENTELLA LLC
300 CLAY ST.
ASHLAND OR. 97520

REVISIONS

COVER

PROJECT NO.: 25-010
ISSUE DATE: 07.08.2025
SHEET:

GJ0.0

8/15/2025 2:27:01 PM

This document, and the ideas and designs incorporated herein, as an instrument of professional service, is the property of Kistler Small + White Architects and is not to be used, in whole or in part, for any other project without the written authorization of Kistler Small + White Architects.

Copywrite 2025 KSW Architects LLC

CALDERA OAKS: BUILDING J

BENTELLA LLC

OWNER	ARCHITECT	CIVIL ENGINEER	LANDSCAPE ARCHITECT	STRUCTURAL ENGINEER	MECHANICAL ENGINEER	ELECTRICAL ENGINEER	PLUMBING ENGINEER
BENTELLA LLC **CONTACT: RYAN CSAFTIS** **7184 AVIARA DR** **CARLSBAD CA, 92011** **(760) 889-7342 (P)** **RYAN@BENTELLA.COM**	**KSW ARCHITECTS** **CONTACT: RAY KISTLER** **66 WATER STREET** **ASHLAND, OR 97520** **(541) 488-8200 (P)** **(541) 552-9512 (F)** **RAY@KISTLERSMALLWHITE.COM**	**POWELL ENGINEERING** **CONTACT: TOD POWELL** **ROSSANLEY DR.** **MEDFORD, OR. 97501** **(541) 613-0723 (P)** **TODD@POWELLENGINEERINGCONSULTING.COM**	**TERRAIN LANDSCAPE ARCHITECTURE** **CONTACT: SAMUEL G. BICKEL** **HIDDEN LN.** **ASHLAND, OR. 97520** **(541) 500-4776 (P)** **SAM@TERRAINARCH.COM**	**STRUCTURAL SOLUTIONS, INC** **CONTACT: JASON PRINS, PE, SE** **305A SHAFER LANE** **JACKSONVILLE OR 97530** **(541) 608-8117 (P)** **JASON@STRUCTURALSOLUTIONSINC.NET**			

ABBREVIATIONS - GENERAL

NOTE: ABBREVIATIONS BELOW MAY NOT INCLUDE ALL FOUND IN THE DRAWINGS

ABV	ABOVE	FIN	FINISH (ED)	OFCI	OWNER FURNISHED CONTRACTOR INSTALLED
AC	ASHPHALTIC CONCRETE	FND	FEMININE NAPKIN DISPENSER	OFOI	OWNER FURNISHED OWNER INSTALLED
ACT	ACOUSTIC CEILING TILE	F.O.	FACE OF	P	PAINT
AFF	ABOVE FINISHED FLOOR	F.O.C.	FACE OF CONCRETE / FACE OF COLUMN	PLAM	PLASTIC LAMINATE
ALT	ALTERNATE	F.O.F.	FACE OF FINISH	PLWD	PLYWOOD
ASW	AREA SEPARATION WALL	F.O.M.	FACE OF MASONRY	PSF	POUNDS PER SQ. FOOT
BD	BOARD	F.O.S.	FACE OF STUD / STRUCTURE	PWC	PLASTIC WALL COVERING
BLDG	BUILDING	FP	FIREPLACE	PWP	PLASTIC WALL PANEL
B.O.	BOTTOM OF	FR	FIRE RESISTANT	PT	PRESSURE TREATED
BM	BEAM	FRP	FIBERGLASS REINFORCED PANEL	RD	ROOF DRAIN
BS	BACKSPLASH	FRMG	FRAMING	REF	REFRIGERATOR
CAB	CABINET	FRZR	FREEZER	RM	ROOM
CFCI	CONTRACTOR FURNISHIED CONTRACTOR INSTALLED	FTG	FOOTING	RO	ROUGH OPENING
		GA	GUAGE	SD	SOAP DISPENSER
CH	COAT HOOK	GA	GYPSUM ASSOCIATION	SEP	SEPARATION
CJ	CONTROL JOINT	GALV	GALVANIZED	SF	SQUARE FEET
CLG	CEILING	GB	GYPSUM BOARD	SQ FT	SQUARE FEET
CLR	CLEAR	GWB	GYPSUM WALL BOARD	SHTG	SHEATHING
CMU	CONCRETE MASONRY UNIT	GI	GALVANIZED IRON	SHT	SHEET
COL	COLUMN	GS	GALVANIZED STEEL	SIM	SIMILAR
CONC	CONCRETE	HS	HALL STATION (ELEVATOR)	SM	SHEET METAL
CONF	CONFERENCE	H	HIGH	SMS	SHEET METAL SCREWS
CONT	CONTINUOUS	HDBD	HARDBOARD	SPECS	SPECIFICATIONS
CORR	CORRIDOR	HDR	HEADER	STB	SINGAL TERMINAL BACKBOARD
CPT	CARPET	HDWD	HARDWOOD	STL	STEEL
CR	CLASSROOM	HGT	HEIGHT	STR	STRUCTURAL
CT	CERAMIC TILE	HR	HOUR	SS	SOLID SURFACE
CTB	COMPUTER TERMINAL BOARD	HVAC	HEATING/VENTILATION/AIR CONDITIONING	SST	STAINLESS STEEL
CTSK	COUNTERSINK	HW	HOT WATER	TPD	TOILET PAPER DISPENSER
CURT	CURTAIN/ DRAPERY	HC	HANDICAP	TRSFR	TRANSFORMER/TRANSFER
DBL	DOUBLE	INSUL	INSULATION	TS	TUBE STEEL
DIA	DIAMETER	IR	INSIDE RADIUS	TTB	TELEPHONE TERMINAL BACKBOARD
DIMS	DIMENSIONS	JST	JOIST	TVB	DATA TERMINAL BACKBOARD
DF	DRINKING FOUNTAIN	KS	KNEE SPACE	TYP	TYPICAL
DS	DOWNSPOUT	LAV	LAVATORY	TH	THRESHOLD
DW	DISHWASHER	LPG	LIQUID PROPANE GAS	TO	TOP OF
DP	DISABLED PERSON	M	MIRROR	TC	TOP OF CONCRETE / CURB
(E)	EXISTING	MAX	MAXIMUM	TW	TOP OF WALL
EA	EACH	MB	MARKER BOARD	UL	UNDERWRITER'S LABORATORY
EL	ELEVATION	MDL	MODEL	UTIL	UTILITY
ELEC	ELECTRICAL	MECH	MECHANICAL	UNO	UNLESS NOTED OTHERWISE
ELEV	ELEVATOR	MED	MEDIUM	VCT	VINYL COMPOSITION TILE
EM	ENTRANCE MATTING	MFR	MANUFACTURER	VERT	VERTICAL
EMT	ELECTRICAL METALLIC TUBING	MIN	MINIMUM	VEST	VESTIBULE
EPT	EPOXY PAINT	MISC	MISCELLANEOUS	VWC	VINYL WALL COVERING
EQ	EQUAL	MPH	MILES PER HOUR	WBG	WALL BUMPER GUARD
(E)	EXISTING	MTL	METAL	WC	WATER CLOSET
EJ	EXPANSION JOINT	MW	MICROWAVE	WD	WOOD
EXT	EXTERIOR	(N)	NEW	WDW	WINDOW
FD	FLOOR DRAIN	NIC	NOT IN CONTRACT	WH	WATER HEATER
FE	FIRE EXTINGUISHER	O/	OVER	WTP	WATER TREATMENT PLANT
FEC	FIRE EXTINGUISHER & CABINET	OCC	OCCUPANCY	WF	WIDE FLANGE
FF	FINISHED FLOOR	OPNG	OPENING	WS	WOOD SCREW
FFE	FINISHED FLOOR ELEVATION	OC	ON CENTER	W.I.C.	WOODWORK INSTITUTE
FG	FINISH GRADE	OD	OUTSIDE DIAMETER	W/	WITH
FHSMS	FLAT HEAD SHEET METAL SCREWS				
FHMB	FLAT HEAD MACHINE BOLT				

SYMBOLS LEGEND - GENERAL

DETAIL
DETAIL NUMBER
SHEET NUMBER

WALL CROSS SECTION
SECTION NUMBER
SHEET NUMBER

BUILDING CROSS SECTION
SECTION NUMBER
SHEET NUMBER

EXTERIOR ELEVATION
SHEET NUMBER
ELEVATION NUMBER

INTERIOR ELEVATION
SHEET NUMBER
ELEVATION NUMBER

GRID LINE
TOP TO BOTTOM: LETTERS
LEFT TO RIGHT: NUMBERS
(ASSUMED PROPERTY LINES ARE NOTED AS "PN,PS,PE, OR PW")

NAME
101
150 SF
ROOM IDENTIFICATION
ROOM NAME
ROOM NUMBER
AREA

NORTH ARROW
ARROW INDICATES PLAN NORTH

DRAWING REVISION
REVISION NUMBER. SEE REVISION SCHEDULE ON TITLEBLOCK

DOOR IDENTIFICATION
NO: CORRESPONDS TO ROOM
LETTER: DOOR IDENTIFICATION

KEYNOTE
KEYNOTE NUMBER

WINDOW IDENTIFICATION
WINDOW TYPE

RELITE IDENTIFICATION
RELITE TYPE

ASSEMBLY IDENTIFICATION
ASSEMBLY TYPE. SEE ASSEMBLIES SHEET FOR MORE INFORMATION.

O.F.C.I. ITEM
ITEM NUMBER

CABINET DIMENSION
W.I.C. CABINET TYPE NUMBER
155
24D / L 1"
CABINET LENGTH
CABINET DEPTH

LEVEL IDENTIFICATION
LEVEL NAME 100'-0"
LEVEL NAME
LEVEL ELEVATION

CENTERLINE

LOUVER IDENTIFICATION
LOUVER NUMBER

RIDGE

VALLEY

SLOPE

STEP IN ELEVATION

100'-0"
SPOT ELEVATION

X" / 12"
SURFACE SLOPE

SEE INDIVIDUAL SHEETS FOR ADDITIONAL LEGENDS AND SYMBOLS

NOTES - GENERAL

1. PROPOSED F.F. (T.O. PLYWOOD ON ARCHITECTURAL DRAWINGS) OF XX.XX' AS SHOWN ON THE CIVIL DRAWINGS IS EQUAL TO 0'-0" ON ALL OTHER DOCUMENTS.
2. CONTRACTOR TO FIELD VERIFY ALL CONDITIONS AND DIMENSIONS PRIOR TO PROCEEDING WITH ANY WORK.
3. DIMENSIONS TAKE PRECEDENCE OVER DRAWING. DO NOT SCALE DRAWINGS. NOTIFY ARCHITECT OF ANY DISCREPANCIES PRIOR TO PROCEEDING WITH WORK. DIMENSIONS ARE TAKEN TO FOC, FOF, FOM, FOS, OR GRID, UNO.
4. CONTRACTOR IS SOLELY RESPONSIBLE FOR CONSTRUCTION MEANS AND METHODS AND SHALL MAINTAIN THE STRUCTURAL INTEGRITY OF ANY CONSTRUCTION UNITS UNTIL ALL FINAL LATERAL AND VERTICAL CARRYING SYSTEMS ARE COMPLETED.
5. CONTRACTOR IS RESPONSIBLE FOR VERIFICATION AND COORDINATION OF SUBCONTRACTORS WORK, COMPLIANCE WITH CONTRACT DOCUMENTS, ACCURATE LOCATION OF STRUCTURAL MEMBERS, AND OPENINGS FOR MECHANICAL, ELECTRICAL, AND MISCELLANEOUS EQUIPMENT. CONTRACTORS TO VERIFY ALL DIMENSIONS AND OPENING SIZES (CLEARANCES REQUIRED FROM MFR PRIOR TO CONSTRUCTION AND INSTALLATION OF EQUIPMENT, FURNISHINGS, ACCESSORIES ETC).
6. CONTRACTOR IS RESPONSIBLE FOR TRADE PERMITS
7. DETAILS NOTED AS "TYPICAL" OR "TYP" APPLY IN ALL CASES WHETHER OR NOT SPECIFICALLY REFERENCED. DETAILS THAT ARE SPECIFICALLY REFERENCED SHALL TAKE PRECEDENCE OVER "TYPICAL" OR "TYP." DETAILS. SPECIFIC DETAILS AND NOTES SHALL TAKE PRECEDENCE OVER GENERAL NOTES AND DETAILS.
8. WHERE COMPONENTS, ASSEMBLIES, ITEMS, EQUIP, ETC. ARE BASED UPON A PARTICULAR SUPPLIER, FABRICATOR AND/OR MANUFACTURER, CONTRACTOR SHALL PROVIDE OPTIONS, ALLOW FOR, AND MAKE ANY CHANGES REQUIRED TO ENSURE DESIGN INTENT SHOWN IN CONTRACT DOCUMENTS IS MET.
9. CONTRACTOR IS RESPONSIBLE FOR THE COMPLETE SECURITY OF THE SITE WHILE THE JOB IS IN PROGRESS AND UNTIL JOB COMPLETION.
10. CONTRACTOR IS RESPONISBLE FOR LOCATING ALL EXISTING UTILITIES WHETHER SHOWN HEREON OR NOT AND TO PROTECT THEM FROM DAMAGE. THE CONTRACTOR SHALL BEAR ALL EXPENSES OF REPAIR OR REPLACEMENT OF UTILITIES OR OTHER PROPERTY DAMAGED BY OPERATIONS IN CONJUNCTION WITH THE EXECUTION OF THE WORK.
11. CONTRACTOR TO PROVIDE TEMPORARY PEDESTRIAN PROTECTION AS REQUIRED BY THE AUTHORITY HAVING JURISDICTION
12. ALL UNPAINTED FERROUS METALS EXPOSED TO WEATHER SHALL BE GALVANIZED, UNO.
13. SEPARATE ALL METALS FROM DIS-SIMILAR METALS WITH BITUMINOUS TAPE OR PT.
14. APPROPRIATE SEALANT SHALL BE USED TO SEAL ALL JOINTS OF MILLWORK, TRIM, EQUIPMENT WALL MOUNTING PENETRATIONS IN FRP, SST, FLASHINGS, PLAM, ETC. IN FOOD SERVICE AREAS TO PRODUCE A WATERTIGHT SANITARY SEAL.
15. DOORS NOT LOCATED BY DIMENSIONS SHALL BE CENTERED IN WALL OR SHALL BE LOCATED FOUR INCHES FROM FINISH WALL TO HINGE SIDE OF DOOR.
16. SCREWS ATTACHING GYPSUM BOARD TO RESILIENT CHANNELS SHALL NOT MAKE CONTACT AT THE METAL STUDS BEYOND.
17. CONTRACTOR TO PROVIDE BACKING OR BLOCKING AS REQUIRED FOR MOUNTING ALL GRAB BARS, SHELVES, EQUIPMENT, HAND RAILS, ACCESSORIES, CABINETS ETC. INCLUDING ITEMS INDICATED AS NIC.
18. CONTRACTOR TO PROVIDE ALL ACCESS PANELS AS REQUIRED. LOCATION, FINISH, AND TYPE SHALL BE APPROVED BY ARCHITECT PRIOR TO OBTAINING AND INSTALLING. ACCESS PANEL LOCATIONS NOT APPROVED BY ARCHITECT SHALL BE SUBJECT TO MODIFICATION AT NO ADDITIONAL COST. PROVIDE RATED PANELS (MATCHING ASSEMBLY RATING) WHERE REQUIRED TO PENETRATE A RATED ASSEMBLY. ACCESS PANELS IN SHAFT WALLS, RATED FLOOR/CEILINGS OR RATED ROOF/CEILINGS SHALL BE SMOKE SEALED.
19. SAFTEY GLAZING TO BE PERMANANTLY LABLED WITH MANUFACTURER'S NAME AND TEST APPROVAL INFORMATION.
20. CONTRACTOR TO PROVIDE PRODUCT INFORMATION OF FIRESTOP MATERIALS/ASSEMBLIES TO BE USED, PENETATION TYPES, LOCATIONS, AND UL/ICC REPORTS INCLUDING LISTING NUMBERS TO BUILDING INSPECTOR FOR REVIEW AND APPROVAL.
21. AUTOMATIC FIRE SPRINKLER PLANS SHALL BE SUBMITTEED TO THE FIRE MARSHALL FOR REVIEW AND APPROVAL. DESIGN AND INSTALLATION SHALL CONFORM TO NFPA 13, NFPA 13R, NFPA 24 AND NFPA 71 STANDARDS. INSTALLATION OF THE SPRINKLER SYSTEM SHALL NOT BE STARTED UNTIL COMPLETE PLANS AND SPECIFICATIONS(INCLUDING WATER SUPPLY INFORMATION AND TYPE OF EXIST. SPRINKLER SYSTEM, IF ANY) HAVE BEEN APPROVED BY THE FIRE MARSHAL HAVING JURISDICTION. AT VARIOUS STAGES AND UPON COMPLETION. THE SYSTEM MUST BE TESTED IN THE PRESENCE OF THE ENFORCING AUTHORITY.
22. SMOKE/FIRE DAMPERS SHALL BE FIRE MARSHAL APPROVED AND INSTALLED STRICTLY IN ACCORDANCE WITH THE MFR'S INSTRUCTIONS. MFR'S INSTRUCTIONS SHALL BE MADE AVAILABLE TO THE INSPECTING AUTHORITY. DETAILS SHOWN ARE FOR REFERENCE ONLY. FIRE DAMPER ACCESS DOORS SHALL BE PROVIDED WHERE AIR DUCTS PENETRATE FIRE RATED WALLS OR CEILINGS AS PER OSSC CHAPTER 714 - 717.

DRAWING INDEX

GENERAL
GJ0.0 COVER
GJ0.1 GENERAL INFORMATION
GJ0.5 CODE SUMMARY
~~GJ0.6 CODE SUMMARY - ELEVATIONS~~

LANDSCAPE
L0.0 NOTES & ABBREVIATIONS
L0.1 TREE PROTECTION & REMOVAL PLAN
L0.2 MATERIALS LEGEND
L1.0 OVERALL LANDSCAPE PLAN
~~L1.1 LANDSCAPE MATERIALS PLAN~~
L1.2 LANDSCAPE MATERIALS PLAN
L2.0 LANDSCAPE LAYOUT PLAN
L2.1 LANDSCAPE ENLARGED LAYOUT PLAN
L4.0 PLANT PALETTE
L4.0B PLANT IMAGES
~~L4.1 LANDSCAPE PLANTING PLAN~~
L4.2 LANDSCAPE PLANTING PLAN
L4.3 PLANTING DETAILS
L5.0 IRRIGATION NOTES & LEGEND
~~L5.1 LANDSCAPE IRRIGATION PLAN~~
L5.2 LANDSCAPE IRRIGATION PLAN
L5.3 IRRIGATION DETAILS
L5.4 IRRIGATION DETAILS
L5.5 IRRIGATION DETAILS
L7.0 LANDSCAPE DETAILS
L7.1 LANDSCAPE DETAILS
L7.2 LANDSCAPE DETAILS

ARCHITECTURAL
A0.1 SITE PLAN
A0.2 SITE DETAILS
~~A0.1.2 ASSEMBLIES~~
AJ3.1 PLAN - LEVEL 1
AJ3.2 PLAN - LEVEL 2
AJ3.3 ROOF PLAN
AJ3.4 ROOF PLAN - LOT 25
AJ3.5 UNIT COMPOSITE - UNIT J FLOOR PLANS
AJ3.6 UNIT COMPOSITE - UNIT J RCPS
AJ3.7 UNIT COMPOSITE - UNIT J ELEVATIONS
~~AJ4.1 VERTICAL CIRCULATION - STAIR 1~~
AJ6.1 EXTERIOR ELEVATIONS
AJ6.2 EXTERIOR ELEVATIONS
AJ6.3 EXTERIOR ELEVATIONS - LOT 25
AJ6.4 EXTERIOR ELEVATIONS - LOT 25
AJ7.1 BUILDING SECTIONS
AJ7.2 BUILDING SECTIONS
AJ7.3 BUILDING SECTIONS - LOT 25
~~AJ7.5 DOOR AND WINDOW SCHEDULE~~
~~AJ7.6 FINISH SCHEDULE~~
~~AJ7.7.2 INTERIOR LEGENDS~~

ELECTRICAL
~~EJ1.0 ELECTRICAL PLANS~~

STRUCTURAL
SJ0.1 STRUCTURAL GENERAL NOTES
SJ0.2 GENERAL NOTES & INSPECTION SCHEDULES
SJ3.1 FOUNDATION PLAN
SJ3.2 ROOF LEVEL 2 PLAN
SJ3.3 ROOF FRAMING PLAN
SJ3.4 ROOF FRAMING PLAN - LOT 25
SJ6.1 FOUNDATION DETAILS
SJ7.1 LEVEL 2 FRAMING DETAILS
SJ8.1 ROOF FRAMING DETAILS
SJ8.2 ROOF FRAMING DETAILS - LOT 25

DEFFERED SUBMITTALS

1. AUTOMATIC FIRE SPRINKLER SYSTEM
2. FIRE ALARM AND SMOKE DETECTION SYSTEM
3. PRE-MANUFACTURED ROOF TRUSSES

ALTERNATE LIST

1. DEDUCT ALT #1: FLAT LID CEILING AT LEVEL 02 BEDROOMS

KEY MAP

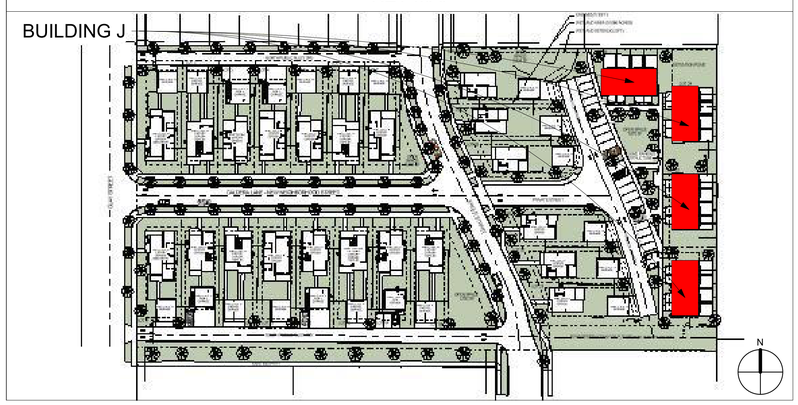

MATERIALS LEGEND - GENERAL

EARTH
GRAVEL / ROCK
SAND / GROUT
CONCRETE
CMU
BRICK
EXISTING WALL
WALL TO BE DEMOLISHED
NEW WALL
BATT INSULATION
RIGID INSULATION
ALUMINUM
STEEL
DIMENSIONAL LUMBER
BLOCKING / SHIM
FINISH WOOD
PLYWOOD

NOTE: ALL METERIAL SYMBOLS ABOVE MAY NOT NECESSARILY BE USED IN THIS PROJECT. SEE INDIVIDUAL SHEETS FOR ADDITIONAL LEGENDS AND SYMBOLS.

ksw ARCHITECTS
66 WATER STREET
SUITE 101
ASHLAND, OR
97520
TEL.: 541.488.8200

CONSTRUCTION DOCUMENTS

CALDERA OAKS: BUILDING J

BENTELLA LLC
300 CLAY ST.
ASHLAND OR. 97520

REVISIONS

GENERAL INFORMATION

PROJECT NO.: 25-010
ISSUE DATE: 07.08.2025
SHEET:

GJ0.1

8/15/2025 2:30:50 PM
This document, and the ideas and designs incorporated herein, as an instrument of professional service, is the property of Kistler Small + White Architects and is not to be used, in whole or in part, for any other project without the written authorization of Kistler Small + White Architects.
Copywrite 2025 KSW Architects LLC

8/15/2025 2:27:01 PM

Copywrite 2025 KSW Architects LLC

This document, and the ideas and designs incorporated herein, as an instrument of professional service, is the property of Kistler Small + White Architects and is not to be used, in whole or in part, for any other project without the written authorization of Kistler Small + White Architects.

GOVERNING CODES

THE DESIGN OF THIS PROJECT IS BASED ON THE FOLLOWING CODES:

2023 OREGON RESIDENTIAL SPECIALTY CODE

2025 OREGON ENERGY EFFICIENCY SPECIALTY CODE
(BASED ON ASHRAE STANDARD 90.1-2019)

2022 OREGON MECHANICAL SPECIALTY CODE

2023 OREGON ELECTRICAL SPECIALTY CODE

2023 OREGON PLUMBING SPECIALTY CODE

2022 OREGON FIRE CODE

NFPA 72: NATIONAL FIRE ALARM CODE, 2019 ED.

NFPA 13: AUTOMATIC SPRINKLER SYSTEMS, 2019 ED

BLDG OCCUPANCY & SEPARATIONS

CHAPTER R301

OCCUPANCY SEPARATION (TABLE R302):

OCCUPANCY	REQUIRED SEPARATION PER R302.2.1(2)
TOWNHOUSE	2 HR BETWEEN DWELLING UNITS VERTICAL & HORIZONTAL (PER ORSC R302.2.1)

FIRE PROTECTION

CHAPTER R302

	REQUIRED	PROPOSED	TYPE/CLASS
AUTOMATIC SPINKLER SYSTEM	NO	NO	-
FIRE ALARM SYSTEM	NO	NO	-
SMOKE DETECTION SYSTEM	YES PER R314.2.1	YES	NFPA 72

MEANS OF EGRESS

CHAPTER R311

MINIMUM ROOM AREA (PER R304.1):
RESIDENTIAL = 70 SQFT.
MINIMUM DIMENSIONS = 7FT. ANY HORIZONTAL DIMENSION

NUMBER OF EXITS (R311.2) 1 - 32" EXIT REQUIRED PER UNIT

LANDINGS AT EXTERIOR DOORS (R311.3):
THERE SHALL BE A LANDING OR FLOOR ON EACH SIDE OF EACH EXTERIOR DOOR.
LANDINGS / FLOOR SPACE MUST NOT BE LESS THAN 36 INCHES IN DIRECTION OF TRAVEL AND NOT EXCEED A 2 % SLOPE.
LANDINGS SHALL NOT EXCEED MORE THAN 1.5 INCHES LOWER THAN THE TOP OF THE THRESHOLD

STAIRWAYS (R311.7):
RISER HEIGHT AND TREAD DEPTH: RISER = 8" MAX / TREAD = 9" MIN. (R311.7.5)
VERTICAL RISE OF A SINGLE STAIR MAY NOT BE MORE THAN 12' 7" (R311.7.3)
NOSING AND RISER SHALL HAVE A RADIUS CURVATURE OF NOT GREATER THAN 9/16" OR BEVEL NOT GREATER THAN 1/2". (R311.7.5.3)
*NOSING PROJECT IS NOT REQUIRED WHERE TREAD DEPTH IS NOT LESS THAN 10".
STAIRWAY LANDINGS PER SECTION (R311.7.6 - 8.6)

RAMPS (R311.8):
SLOPE AT MEANS OF EGRESS: NOT STEEPER THAN 1:12
OTHER RAMPS: NOT STEEPER THAN 1:8

HALLWAYS (R311.6):
MINIMUM CORRIDOR WIDTH = 36 INCHES

ENERGY CONSERVATION

TABLE N1101.1(1), ORSC

BUILDING COMPONENTS	REQUIRED	PROPOSED
CEILING - FLAT	R-49	R-49
CEILING - VAULTED	R-30	R-49
EXTERIOR WALLS - WOOD FRAMED	R-21	R-21
FLOOR - UNHEATED SLAB ON GRADE	R-15 FOR 24"	R-15
EXTERIOR DOORS*	U-0.20	
WINDOWS**	U-0.27	

*A MAXIMUM OF 28SF OF EXTERIOR DOOR PER DWELLING UNIT CAN HAVE A U FACTOR OF 0.54 OR LESS.

**GLASS DOORS SHALL COMPLY WITH WINDOW REQUIREMENTS

PROJECT INFORMATION

PERMIT APPLICANT: KSW ARCHITECTS LLC.
ON BEHALF OF BENTELLA LLC

PROJECT ADDRESS: 300 CLAY STREET
ASHLAND, OR 97520
JACKSON COUNTY

PROJECT AGENT: RYAN CSAFTIS
7184 AVIARA DR
CARLSBAD CA, 92011

PROJECT NARRATIVE:

THE PROPOSED PROJECT IS A 2-STORY, 4-UNIT ATTACHED "TOWNHOUSE" PER ORSC. THE PROJECT IS LOCATED WITHIN THE CALDERA OAKS DEVELOPMENT.

THE BUILDING INCLUDES 4 HOUSING UNITS WITH 2 BEDROOMS AND 1.5 BATHS EACH. EACH UNIT IS A TOTAL OF APPROXIMATELY 828 SF IN AREA. LEVEL 01 IS APPROXIMATELY 1,640 SF IN AREA & LEVEL 02 IS APPROXIMATELY 1,672 SF IN AREA, FOR A TOTAL OF 3,312 SF.

CONSTRUCTION IS 2 STORIES OF TYPE V-B. THE BUILDING IS EQUIPPED THROUGHOUT WITH AN AUTOMATIC SPRINKLER SYSTEM (NFPA 13R)

ZONING INFORMATION

ZONING: R-1-3.5 (RESIDENTIAL - SUBURBAN)
GLUP:
OVERLAY ZONES:
CURRENT USE: VACANT
MAP & TAX LOT: 391E11CB -1100
GROSS ACERAGE: -- (-- SF)

RESIDENTIAL SITE DEVELOPMENT STANDARDS (18.2.5.030): R-1-3.5	
MAX COVERAGE FACTOR	**55%**
MIN FRONT YARD BUILDING SETBACK	**15'** (STANDARD) **8'** (ENCLOSED PORCH) **20'** (GARAGE)
MIN SIDE YARD BUILDING SETBACK	**6'** (STANDARD) **10'** (ADJ STREET) ***(5' PER 18.3.9)***
MIN REAR YARD BUILDING SETBACK	**10'** PER STORY **5'** PER 1/2 STORY
MAX BUILDING HEIGHT	35 FEET OR 2.5 STORIES
MIN LOT AREA	5,000 SQ FT
MIN DENSITY	N/A
MAX DENSITY	PER MIN LOT AREA

VEHICLE PARKING

PER CITY OF ASHLAND LAND DEVELOPMENT CODE - SECTION 18.4.3

OFF-STREET AUTOMOBILE & BIKE PARKING (TABLE 18.4.3.040)		
LAND USE CATEGORY	**MAX AUTO ALLOWED**	**MIN BIKE REQUIRED**
BOARDING HOUSES; DORMITORIES	2 SPACES FOR EACH DWELLING UNIT **= 8 SPACES MAX.**	1.5 SHELTERED SPACES PER 2 BEDROOMS **= 6 SPACES MIN.**

NOTES:

A) STANDARD SPACE SIZE: 9' X 18'

B) COMPACT SPACE SIZE: 8' X 16'

C) ACCESSIBLE SPACES: 18' LONG, 9' WIDE, 7' HIGH, 6' AISLE (OSSC 1106)
1-25 SPACES = **1 ACCESSIBLE SPACES SHALL BE PROVIDED**

D) VAN ACCESSIBLE SPACES: 18' LONG, 9' WIDE, 8' HIGH, 8' AISLE (OSSC 1106)
1-25 SPACES = **1 VAN ACCESSIBLE SPACE SHALL BE PROVIDED**

E) ELECTRIC VEHICLE CHARGING:
40% OF THE PARKING SPACES SHALL BE INSTALLED WITH THE ELECTRICAL SERVICE CAPACITY AND CONDUIT FOR CHARGING ELECTRIC VEHICLES.
4 ELECTRICAL VEHICLE STALLS SHALL BE ACCOUNTED FOR

F) PARKING AREAS OF MORE THAN SEVEN PARKING SPACES SHALL BE SERVED BY A DRIVEWAY ACCOMMODATING TWO-WAY VEHICULAR CIRCULATION ON SITE SHALL BE 20 FEET.

BICYCLE PARKING

PER CITY OF ASHLAND LAND USE ORDINACE - SECTION 18.4.3

BICYCLE PARKING REQUIREMENT:
MULTIFAMILY RESIDENTIAL: 1.5 SPACE PER 2 BEDROOMS
8 GUESTROOMS X 1.5 = **6 BICYCLE SPACES REQUIRED PER BUILDING**

REQUIRED BICYCLE PARKING PROVIDED IN BIKE PARKING STRUCTURE.

NOTE:
Bicycle parking shall be located so that it is visible to and conveniently accessed by cyclists, and promotes security from theft and damage.

Bicycle parking requirements, pursuant to this section, can be met in any of the following ways:

a. Providing bicycle racks or lockers outside the main building, underneath an awning or marquee, or in an accessory parking structure.

b. Providing a bicycle storage room, bicycle lockers, or racks inside the building.

c. Providing bicycle racks on the public right-of-way, subject to review and approval by the Staff Advisor.

All required exterior bicycle parking shall be located on-site and within 50 feet of a regularly used building entrance and not farther from the entrance than the closest motor vehicle parking space. Bicycle parking shall have direct access to both the public right-of-way and to the main entrance of the principal use.

ksw ARCHITECTS

66 WATER STREET
SUITE 101
ASHLAND, OR
97520
TEL.: 541.488.8200

CONSTRUCTION DOCUMENTS

REGISTERED ARCHITECT
RAYMOND J. KISTLER
3172
ASHLAND, OREGON
STATE OF OREGON

CALDERA OAKS: BUILDING J

BENTELLA LLC
300 CLAY ST.
ASHLAND OR. 97520

REVISIONS

CODE SUMMARY

PROJECT NO.: 25-010
ISSUE DATE: 07.08.2025
SHEET:

GJ0.5

PRELIMINARY SUBDIVISION

CALDERA OAKS

A PERFORMANCE STANDARDS SUBDIVISION

LOCATED IN THE SOUTHWEST QUARTER OF SECTION 11,
TOWNSHIP 39 SOUTH, RANGE 1 EAST,
WILLAMETTE MERIDIAN,
JACKSON COUNTY, OREGON

FOR
BENTELLA LLC

DATE: 07-12-2022
CONTOUR INTERVAL = 1'
SCALE: 1"= 30'

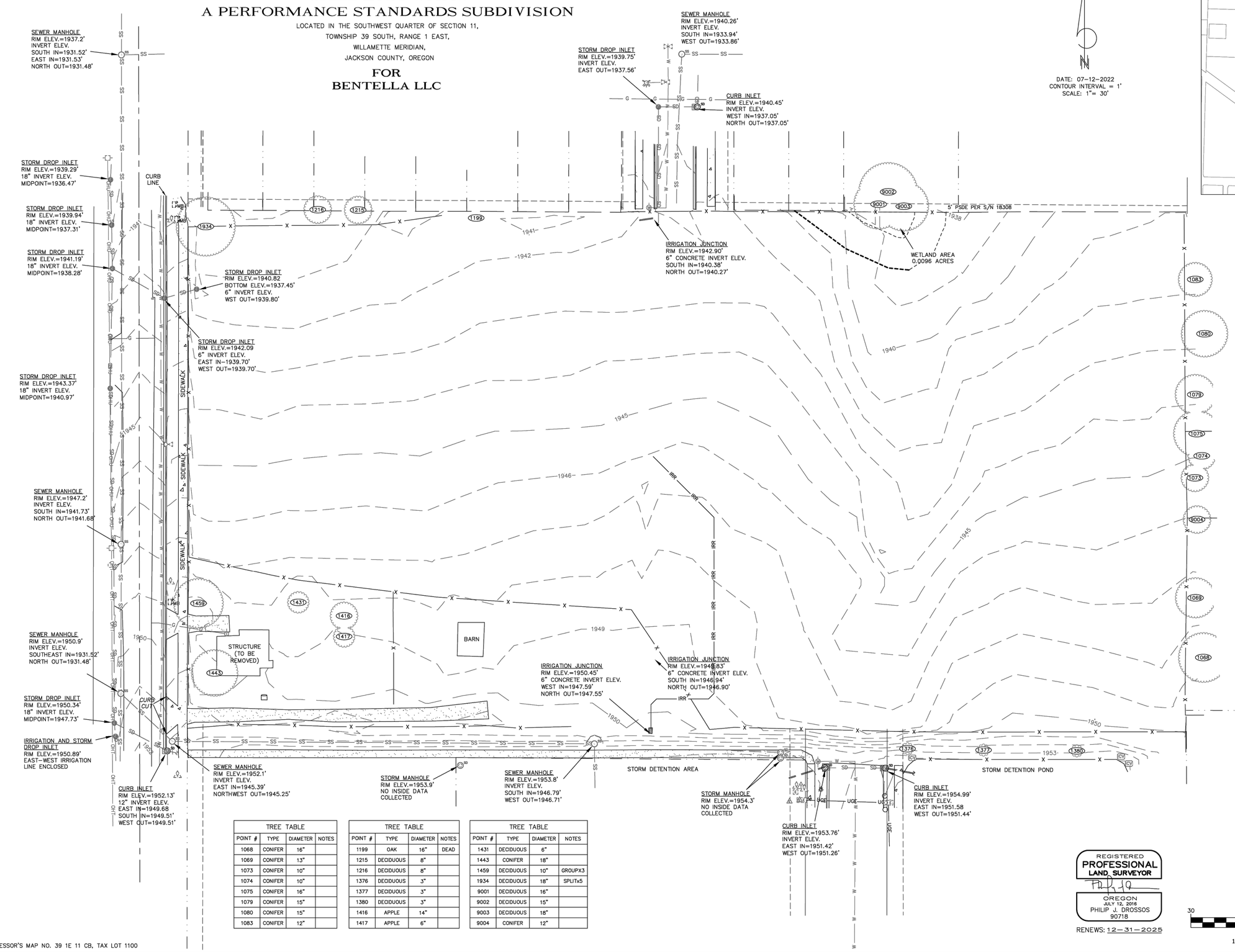

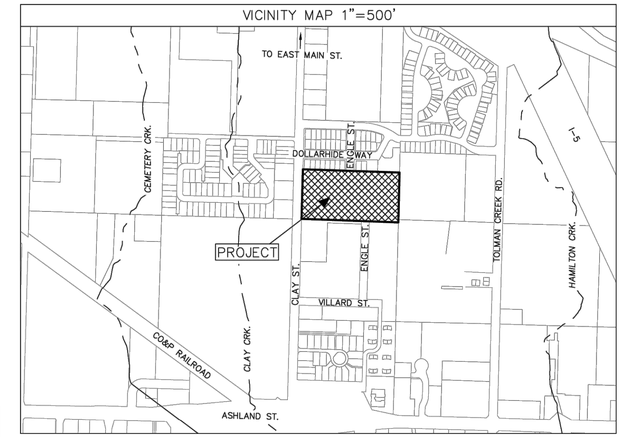

LEGEND

	COMM PEDESTAL (CABLE, TELEPHONE)
	CURB INLET
	ELECTRIC BOX
	ELECTRIC JUNCTION/VAULT
	FIRE HYDRANT
	GAS METER
MB	MAIL BOX
SS	SEWER MANHOLE
	STORM DROP INLET
SD	STORM MANHOLE
	UTILITY POLE
	WATER METER
	WATER VALVE
UGE	UNDERGROUND ELECTRIC
T	UNDERGROUND COMMUNICATIONS
SS	UNDERGROUND SEWER
SD	UNDERGROUND STORM
G	UNDERGROUND GAS
W	UNDERGROUND WATER
1102	TREE (SEE TREE TABLE)
PUE	PUBLIC UTILITY EASEMENT
PPAE	PUBLIC PEDESTRIAN ACCESS EASE.
PSDE	PRIVATE STORM DRAINAGE EASEMENT
	CONCRETE SURFACE
	ASPHALT SURFACE

PROJECT NOTES:

1. BASIS OF BEARING WAS DETERMINED BY RTK (REAL TIME KINEMATIC) GPS OBSERVATIONS ORIENTATED TO TRUE GEODETIC NORTH.
2. VERTICAL DATUM IS NGVD29(56) AND IS BASED ON CITY OF ASHLAND BENCHMARK "GPS PT. 509", A 2-1/2" BRASS CAP IN THE TOP OF CURB LOCATED IN THE SOUTHWEST QUADRANT OF THE INTERSECTION OF EAST MAIN ST. AND CLAY ST. HAVING A RECORD ELEVATION OF 1912.379' .
3. BOUNDARY LINES SHOWN REPRESENT A FULLY RESOLVED BOUNDARY.
4. UTILITIES SHOWN HEREON ARE FROM FIELD SURVEY TIES OF LOCATE PAINT PER O.U.N.C. TICKET #22199767. NO UNDERGROUND LOCATES WERE MARKED ON THE SUBJECT PROPERTY. NO ATTEMPT WAS MADE TO LOCATE HIDDEN UTILITIES. THE SURVEYOR MAKES NO GUARANTEE THAT THE UNDERGROUND UTILITIES SHOWN COMPRISE ALL SUCH UTILITIES IN THE AREA, EITHER IN SERVICE OR ABANDONED. THE SURVEYOR FURTHER DOES NOT WARRANT THAT THE UNDERGROUND UTILITIES SHOWN ARE IN THE EXACT LOCATION INDICATED ALTHOUGH HE DOES CERTIFY THAT THEY ARE LOCATED AS ACCURATELY AS POSSIBLE. THE SURVEYOR HAS NOT PHYSICALLY LOCATED THE UNDERGROUND UTILITIES. *NO LOCATE PAINT FOUND FOR EXISTING CABLE/TELE PEDESTALS ALONG CLAY STREET*
5. EASEMENTS SHOWN ARE PER TITLE REPORTS PROVIDED BY THE CLIENT. NO OTHER EASEMENT RESEARCH WAS PERFORMED AND NO CLAIM IS MADE THAT ALL EASEMENTS OF RECORD ARE SHOWN HEREIN. THE PROPERTY SHOWN HEREIN MAY BE SUBJECT TO OTHER EASEMENTS AND RESTRICTION.
6. CONTOURS ARE 1' INTERVALS.

EASEMENTS SHOWN IN FIRST AMERICAN POLICY NO. 3901852 EFFECTIVE DATE APRIL 07, 2022.

- #9. THESE PREMISES ARE SITUATED IN THE TALENT IRRIGATION DISTRICT, AND SUBJECT TO THE LEVIES AND ASSESSMENTS THEREOF, WATER AND IRRIGATION DITCHES, EASEMENTS FOR DITCHES AND CANALS AND REGULATIONS CONCERNING THE SAME.
- #11. EASEMENT FOR ELECTRIC TRANSMISSION AND DISTRIBUTION LINES, AND RELATED MATTERS. VOL. 231, PG. 369 – BLANKET IN NATURE AND NOT LOCATABLE.
- #13. IRREVOCABLE CONSENT TO ANNEXATION TO THE CITY OF ASHLAND. INST. NO. 93-42568

TREE TABLE

POINT #	TYPE	DIAMETER	NOTES
1068	CONIFER	16"	
1069	CONIFER	13"	
1073	CONIFER	10"	
1074	CONIFER	10"	
1075	CONIFER	16"	
1079	CONIFER	15"	
1080	CONIFER	15"	
1083	CONIFER	12"	

TREE TABLE

POINT #	TYPE	DIAMETER	NOTES
1199	OAK	16"	DEAD
1215	DECIDUOUS	8"	
1216	DECIDUOUS	8"	
1376	DECIDUOUS	3"	
1377	DECIDUOUS	3"	
1380	DECIDUOUS	3"	
1416	APPLE	14"	
1417	APPLE	6"	

TREE TABLE

POINT #	TYPE	DIAMETER	NOTES
1431	DECIDUOUS	6"	
1443	CONIFER	18"	
1459	DECIDUOUS	10"	GROUPX3
1934	DECIDUOUS	18"	SPLITx5
9001	DECIDUOUS	16"	
9002	DECIDUOUS	15"	
9003	DECIDUOUS	18"	
9004	CONIFER	12"	

REGISTERED
PROFESSIONAL
LAND SURVEYOR
OREGON
JULY 12, 2016
PHILIP J. DROSSOS
90718
RENEWS: 12-31-2025

GRAPHIC SCALE
30 0 15 30 60
(IN FEET)
1 INCH = 30 FEET

TERRASURVEY, INC.
PROFESSIONAL LAND SURVEYORS
274 FOURTH STREET
ASHLAND, OREGON 97520
(541) 482-6474
terrain@bisp.net

JOB NO. 1635-22

EXISTING CONDITIONS
C1.1

ASSESSOR'S MAP NO. 39 1E 11 CB, TAX LOT 1100

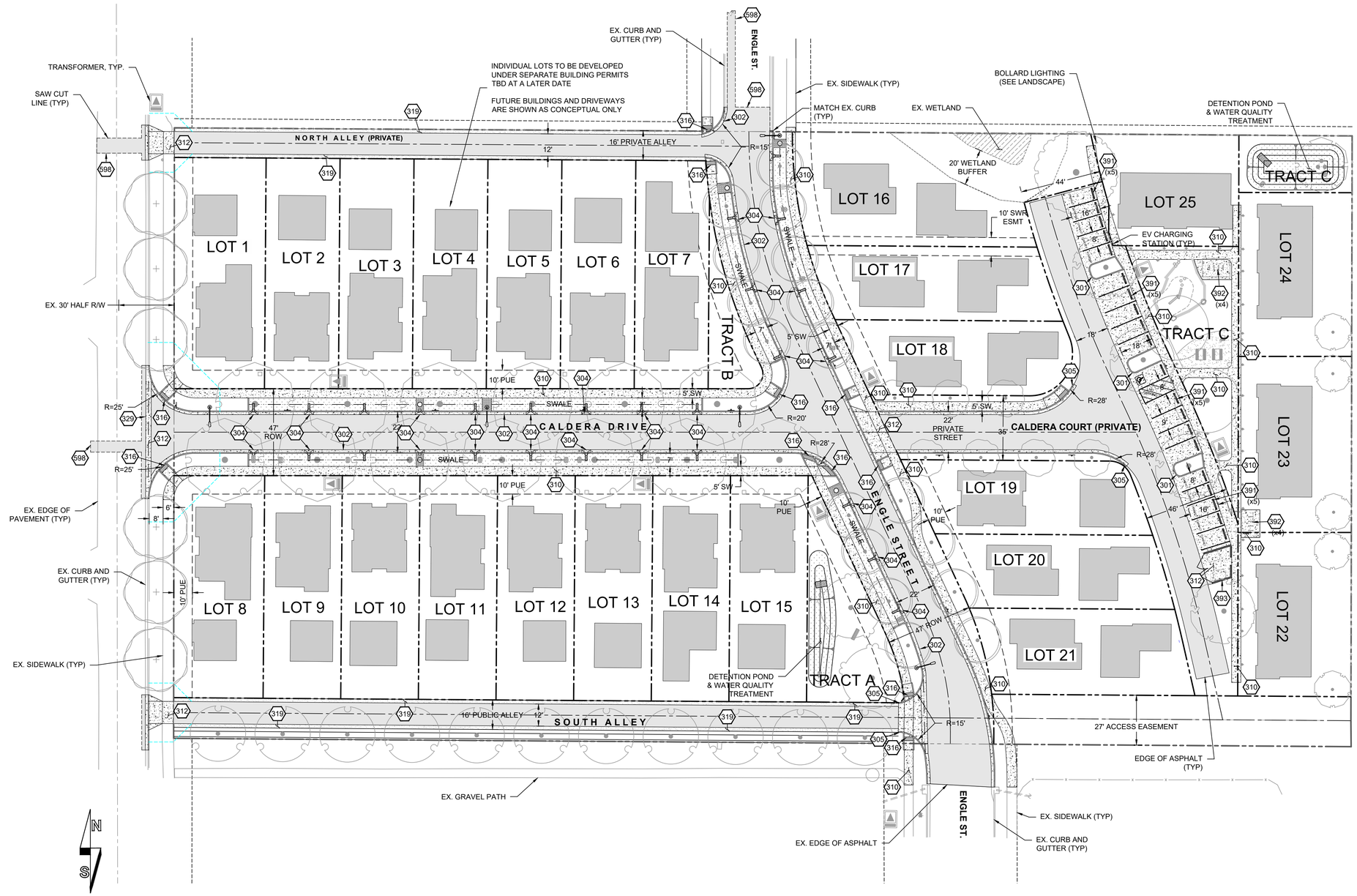

PLAN VIEW - CIVIL SITE PLAN

SCALE: 1" = 30' - 0" (22x34)

GENERAL NOTES

1. SEE LANDSCAPE PLAN FOR PLANTINGS AND IRRIGATION.
2. SEE C4 SERIES FOR ROAD SECTIONS AND PROFILES.
3. SEE TENTATIVE PLAT BY SURVEYOR FOR LOT DIMENSIONS.

KEYNOTES

301	STANDARD CURB	d700 / C6.1
302	CURB AND GUTTER	d700 / C6.1
304	CURB OPENING	9.01 / C6.0
305	CURB TAPER	305 / C6.0
310	4" CONCRETE SIDEWALK OVER 4" CRUSHED ROCK BASE	d721 / C6.1, d722 / C6.1
312	6" REINFORCED CONCRETE SECTION	312 / C6.0
316	CURB RAMP. (SEE C4.6, C4.7, AND C4.8)	
319	GRAVEL SECTION	319 / C6.0
387	EV CHARGING STATION (SEE ELEC)	
391	WHEEL STOPS	392 / C6.0
392	BIKE RACKS (SEE ARCH).	
393	TRASH ENCLOSURE (SEE ARCH)	
598	SAWCUT EXISTING ASPHALT PER OREGON STND DWG RD-302. CLASS B BACKFILL PER RD-300.	rd300 / C6.1, rd302 / C6.1

SETBACK NOTES

1) WHEN A 6-FOOT BY 8-FOOT, COVERED PORCH IS PROPOSED, A 16-FOOT FRONT FACADE SETBACK IS REQUIRED.

2) 4-FOOT REAR YARD SETBACK FROM THE ALLEY AND 3-FOOT SIDE YARD SETBACK FOR DETACHED ACCESSORY STRUCTURES WHEN LESS THAN 15 FEET IN AVERAGE HEIGHT AND COMPLY WITH SOLAR SETBACKS.

POWELL engineering + consulting
46 N. Front St. Suite 200
Medford, OR 97501
541.613.0723
www.powellengineeringconsulting.com

REGISTERED PROFESSIONAL ENGINEER 56425PE OREGON JAN. 13, 2004 TODD D. POWELL
EXPIRES: 12/31/26

VERIFY SCALES
ORIGINAL DRAWING BAR IS ONE INCH
IF NOT ONE INCH ON THIS SHEET, ADJUST SCALES ACCORDINGLY

CALDERA OAKS SUBDIVISION

PUBLIC IMPROVEMENT DRAWINGS

MAP 39-1E-11-CB, TAX LOT 1100
300 CLAY STREET, ASHLAND, OR 97520

NO.	REVISION DESCRIPTION	DATE

DRAWN BY:	TDP
DESIGNED BY:	TDP
CHECKED BY:	TDP
ISSUE DATE:	08/18/25
PERMIT SET	
JOB NO. 22-033	CIVIL SITE PLAN C3.0

COPYRIGHT © 2025 Powell Engineering and Consulting, LLC. This document, and the ideas and designs incorporated herein, as an instrument of professional service, shall remain the property of Powell Engineering and Consulting, and is not to be reproduced, published, or used in whole or in part, for any other project or purpose without the express written authorization of Powell Engineering and Consulting, LLC.

Drawing Name: S:\PEC Shared - Documents\All Staff\Projects\Current Projects\Clay Subdivision\Drawings\CADD\Clay C1-C5.dwg Last Save: August 18, 2025 2:14 PM Plot Date: August 18, 2025 2:41 PM By: Nancy

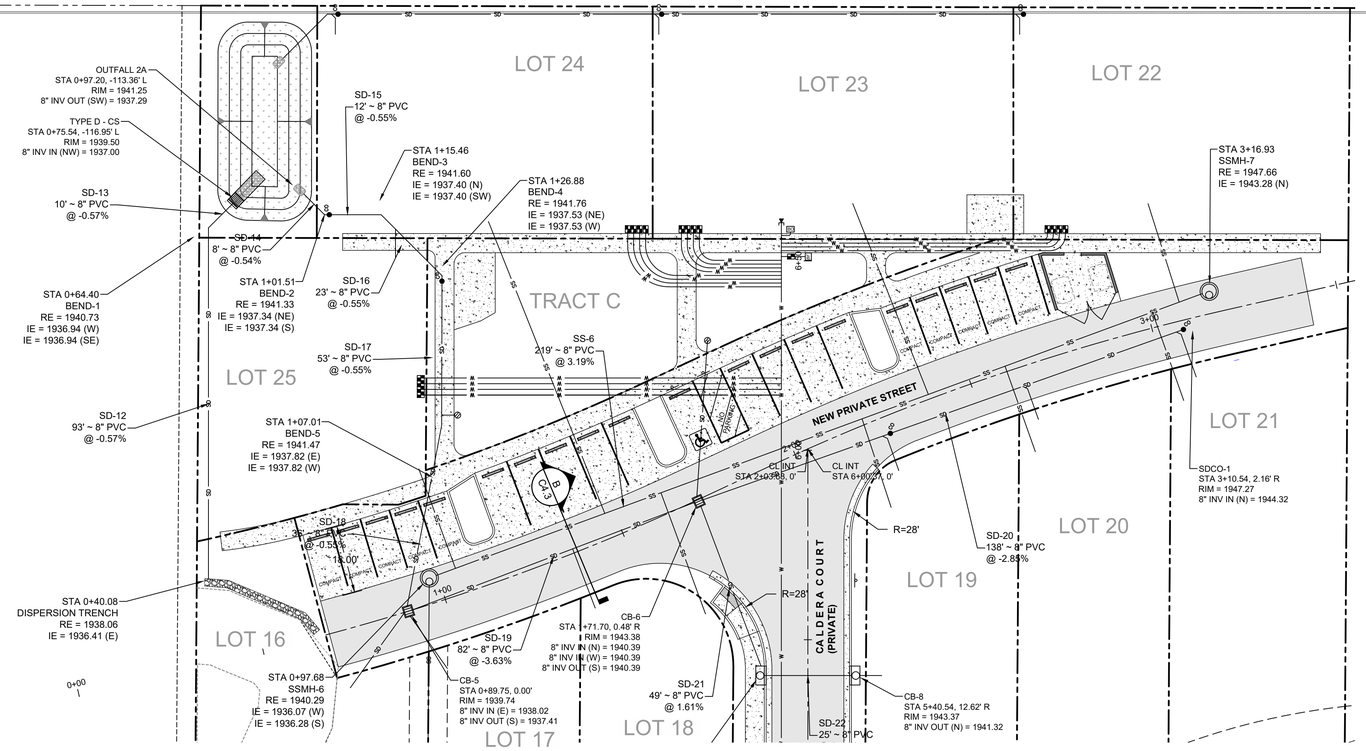

PLAN VIEW - NEW PRIVATE STREET - CALDERA COURT

SCALE: 1" = 20' - 0" (22x34)

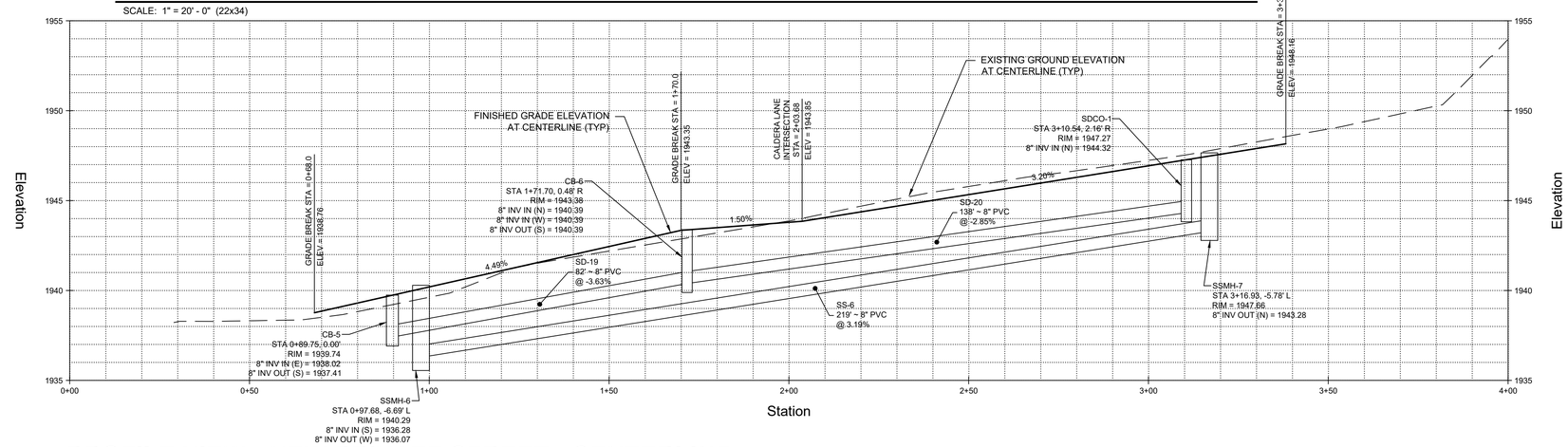

PROFILE VIEW - NEW PRIVATE STREET - CENTERLINE

SCALE: 1" = 20' - 0" (HORIZ)
1" = 4' - 0" (VERT)

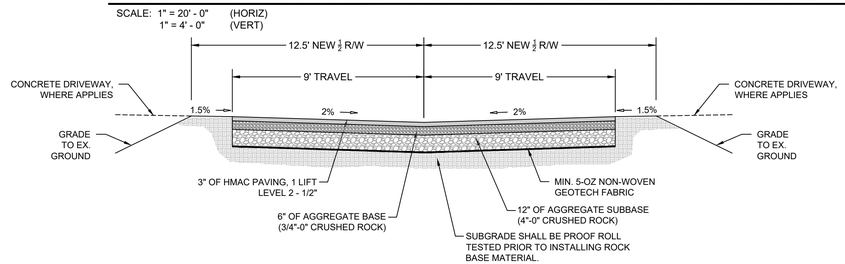

B
C4.3

CITY OF ASHLAND SHARED STREET

SCALE: NTS

0 20 40
1" = 20'

POWELL engineering + consulting
46 N. Front St. Suite 200
Medford, OR 97501
541.613.0723
www.powellengineeringconsulting.com

REGISTERED PROFESSIONAL ENGINEER
56425PE
OREGON
JAN. 13, 2004
TODD D. POWELL
EXPIRES: 12/31/26

VERIFY SCALES
ORIGINAL DRAWING BAR IS ONE INCH
IF NOT ONE INCH ON THIS SHEET, ADJUST SCALES ACCORDINGLY

CALDERA OAKS SUBDIVISION

PUBLIC IMPROVEMENT DRAWINGS

MAP 39-1E-11-CB, TAX LOT 1100
300 CLAY STREET, ASHLAND, OR 97520

NO.	REVISION DESCRIPTION	DATE

DRAWN BY:	TDP
DESIGNED BY:	TDP
CHECKED BY:	TDP
ISSUE DATE:	08/18/25
PERMIT SET	
JOB NO. 22-033	PVT. ST. PLAN & PROFILE C4.3

COPYRIGHT © 2025 Powell Engineering and Consulting, LLC. This document, and the ideas and designs incorporated herein, as an instrument of professional service, shall remain the property of Powell Engineering and Consulting, and is not to be reproduced, published, or used in whole or in part, for any other project or purpose without the express written authorization of Powell Engineering and Consulting, LLC.

Drawing Name: S:\PEC Shared - Documents\All Staff\Projects\Current Projects\Clay Subdivision\Drawings\CADD\Clay C1-C5.dwg Last Save: August 18, 2025 2:14 PM Plot Date: August 18, 2025 2:50 PM By: Nancy

ABBREVIATIONS:

ADJ	ADJACENT
AL	ALIGN
ALT	ALTERNATE
BLDG	BUILDING
BNB	BOARD AND BATTEN
BO	BOTTOM OF
BOS	BOTTOM OF STRUCTURE
BOW	BOTTOM OF WALL
BS	BOTTOM STEP
CFCI	CONTRACTOR FURNISHED, CONTRACTOR INSTALLED
CIVIL	CIVIL ENGINEER
CJ	CONTROL JOINT
CL	CENTERLINE
CLR	CLEAR
CMU	CONCRETE MASONRY UNIT
COL	COLUMN
CONC	CONCRETE
CONT	CONTINUOUS
CTSK	COUNTERSUNK
DBL	DOUBLE
DIA	DIAMETER
DIM	DIMENSIONS
DWG	DRAWING
EJ	EXPANSION JOINT
EA	EACH
EQ	EQUAL(LY)
EXG	EXISTING
EXT	EXTERIOR
FF	FINISH FLOOR / FINISH FACE
FG	FINISH GRADE
FIN	FINISH(ED)
FOW	FACE OF WALL
GS	GALVANIZED STEEL
GA	GAUGE
GALV	GALVANIZED
HDR	HEADER
HDWD	HARDWOOD
HGT	HEIGHT
HORIZ	HORIZONTAL
INT	INTERIOR
IR	INSIDE RADIUS
JST	JOIST
JTS	JOINTS
MAX	MAXIMUM
MDL	MODEL
MECH	MECHANICAL
MEP	MECHANICAL, ELECTRICAL AND PLUMBING
MFR	MANUFACTURER
MIN	MINIMUM
MISC	MISCELLANEOUS
MTL	METAL
NIC	NOT IN CONTRACT
O/	OVER
OC	ON CENTER
OD	OUTSIDE DIAMETER
OFCI	OWNER FURNISHED, CONTRACTOR INSTALLED
OFOI	OWNER FURNISHED, OWNER INSTALLED
OPNG	OPENING
OVHG	OVERHANG
PA	PLANTING AREA
PT	PAINT(ED)
PTW	PRESSURE TREATED WOOD
PWD	PLYWOOD
RECT	RECTANGULAR
REINF	REINFORCED
RO	ROUGH OPENING
SAD	SEE ARCHITECTURAL DRAWINGS
SCD	SEE CIVIL DRAWINGS
SD	STORM DRAIN
SF	SQUARE FEET
SIM	SIMILAR
SPECS	SPECIFICATIONS
SQ	SQUARE
SS	SANITARY SEWER
SSD	SEE STRUCTURAL DRAWINGS
SSTL	STAINLESS STEEL
STL	STEEL
STRUCT	STRUCTURAL/STRUCTURE
SW	STORMWATER
SWPA	STORMWATER PLANTING AREA
TNG	TONGUE AND GROOVE
TO	TOP OF
TOW	TOP OF WALL
TS	TOP STEP
TYP	TYPICAL
UNO	UNLESS NOTED OTHERWISE
UTIL	UTILITY
VERT	VERTICAL
VIF	VERIFY IN FIELD
W/	WITH
WD	WOOD
WP	WATERPROOF
WWM	WELDED WIRE MESH

TREE PROTECTION AND REMOVAL NOTES:

1. PRIOR TO DELIVERING EXCAVATION EQUIPMENT OR COMMENCING ANY CONSTRUCTION ACTIVITIES ON THE SITE, THE GENERAL CONTRACTOR SHALL CONTACT THE LANDSCAPE ARCHITECT FOR A PRE-CONSTRUCTION MEETING WITH THE LANDSCAPE ARCHITECT AND EXCAVATION SUPERVISOR PRIOR TO COMMENCING ANY WORK ON THE SITE. THE LANDSCAPE ARCHITECT SHALL BE NOTIFIED BY THE CONTRACTOR 48 HRS. IN ADVANCE FOR ALL SITE VISITS REQUESTED. CONTRACTOR SHALL OBTAIN WRITTEN APPROVAL FROM THE OWNER'S REPRESENTATIVE THAT CONSTRUCTION MAY BEGIN AFTER ALL OF THE DESCRIBED FENCING IS IN PLACE. FENCING SHALL REMAIN IN PLACE UNTIL THE PROJECT IS COMPLETED.

2. FENCES MUST BE ERECTED TO PROTECT TREES TO BE PRESERVED AS SHOWN IN DIAGRAM. FENCING SHALL BE 6' TALL TEMPORARY CHAIN LINK PANELS INSTALLED WITH METAL CONNECTIONS TO ALL PANELS AREA INTEGRATED, THESE FENCES SHALL BE INSTALLED SO THAT IT DOES NOT ALLOW PASSAGE OF PEDESTRIANS AND/ OR VEHICLES THROUGH IT. FENCES DEFINE A SPECIFIC PROTECTION ZONE FOR EACH TREE OR GROUP OF TREES. FENCES ARE TO REMAIN UNTIL ALL SITE WORK HAS BEEN COMPLETED. FENCES MAY NOT BE RELOCATED OR REMOVED WITHOUT THE PERMISSION OF THE LANDSCAPE ARCHITECT.

3. CONSTRUCTION TRAILERS, TRAFFIC AND STORAGE AREAS MUST REMAIN OUTSIDE FENCED TREE PROTECTION ZONES AT ALL TIMES. SEE DETAIL #1 "TREE PRESERVATION FENCING" FOR ADDITIONAL REQUIREMENTS.

4. ALL PROPOSED UNDERGROUND UTILITIES AND DRAIN OR IRRIGATION LINES SHALL BE ROUTED OUTSIDE THE TREE PROTECTION ZONE. IF LINES MUST TRANSVERSE THE PROTECTION AREA, THEY SHALL BE TUNNELED OR BORED UNDER THE TREE ROOTS. NOTIFY THE LANDSCAPE ARCHITECT IMMEDIATELY IF ANY PROJECT PLANS CONFLICT WITH THIS REQUIREMENT.

5. NO MATERIALS, EQUIPMENT, SPOIL, OR WASTE OR WASHOUT WATER MAY BE DEPOSITED, STORED, OR PARKED WITHIN THE TREE PROTECTION ZONE (FENCED AREA).

6. NOTIFY THE LANDSCAPE ARCHITECT IF TREE PRUNING IS REQUIRED FOR CONSTRUCTION CLEARANCE .

7. IF INJURY SHOULD OCCUR TO ANY TREE DURING CONSTRUCTION, NOTIFY THE LANDSCAPE ARCHITECT IMMEDIATELY. ALL DAMAGE CAUSED BY CONSTRUCTION TO EXISTING TREES SHALL BE COMPENSATED FOR BY THE OFFENDING PARTY, BEFORE THE PROJECT WILL BE CONSIDERED COMPLETE.

8. WATERING SCHEDULE: WATERING PROTECTED TREES SHALL FOLLOW THESE STANDARDS, HOWEVER PERIODS OF EXTREME HEAT, WIND, RAINFALL OR DROUGHT MAY REQUIRE MORE OR LESS WATER THAN RECOMMENDED IN THESE NOTES.
   A. MOST SPECIES: 1 TIME PER MONTH DURING IRRIGATION SEASON (USUALLY MARCH THROUGH SEPTEMBER)
   B. QUERCUS/OAK: DEEP WATER IN MAY AND SEPTEMBER, DO NOT WATER DURING OTHER MONTHS. FOR OAKS ALREADY IN THE VICINITY OF IRRIGATED CONDITIONS, AUTOMATIC SPRINKLERS OR REGULAR WATERING SHALL NOT BE ALLOWED TO SPRAY ON OR WITHIN 3 FEET OF THE TRUNK. THE WATER SHALL NOT BE ALLOWED TO POOL OR DRAIN TOWARDS THE TRUNK.
   C. WATERING METHOD: HAND WATERING SYSTEMS, RECOMMENDED FOR TREES THAT ARE PART OF A DEVELOPMENT PROJECT THAT MUST BE WATERED TO INSURE TREE SURVIVAL DURING THE COURSE OF CONSTRUCTION UNTIL AUTOMATIC IRRIGATION IS INSTALLED.

9. EROSION CONTROL DEVICES SUCH AS SILT FENCING, DEBRIS BASINS, AND WATER DIVERSION STRUCTURES SHALL BE INSTALLED ON THE UPHILL SIDE OF THE TREE PROTECTION ZONE TO PREVENT SILTATION AND/ OR EROSION WITHIN THE TREE PROTECTION ZONE.

12. BEFORE GRADING, PAD PREPARATION, OR EXCAVATION FOR THE FOUNDATIONS, FOOTINGS, WALLS, OR TRENCHING, ANY TREES WITHIN THE SPECIFIC CONSTRUCTION ZONE SHALL BE ROOT PRUNED 1 FOOT OUTSIDE THE TREE PROTECTION ZONE BY CUTTING ALL ROOTS CLEANLY AT A 90 DEGREE ANGLE TO A DEPTH OF 24 INCHES. ROOTS SHALL BE CUT BY MANUALLY DIGGING A TRENCH AND CUTTING EXPOSED ROOTS WITH A SAW, VIBRATING KNIFE, ROCK SAW, NARROW TRENCHER WITH SHARP BLADES, OR OTHER APPROVED ROOT-PRUNING EQUIPMENT.

13. ANY ROOTS DAMAGED DURING GRADING OR CONSTRUCTION SHALL BE EXPOSED TO SOUND TISSUE AND CUT CLEANLY AT A 90 DEGREE ANGLE TO THE ROOT WITH A SAW. PLACE DAMP SOIL AROUND ALL CUT ROOTS TO A DEPTH EQUALING THE EXISTING FINISH GRADE WITHIN 4 HOURS OF CUTS BEING MADE.

14. IF TEMPORARY HAUL OR ACCESS ROADS MUST PASS OVER THE ROOT AREA OF TREES TO BE RETAINED, A ROAD BED OF 6 - 8 INCHES OF WOOD MULCH OR GRAVEL SHALL BE CREATED TO PROTECT THE SOIL. THE ROAD BED MATERIAL SHALL BE REPLENISHED AS NECESSARY TO MAINTAIN A MIN. 6 INCH DEPTH.

15. SPOIL FROM TRENCHES, BASEMENTS, OR OTHER EXCAVATIONS SHALL NOT BE PLACED WITHIN THE TREE PROTECTION ZONE, EITHER TEMPORARILY OR PERMANENTLY.

16. NO BURN PILES OR DEBRIS PILES SHALL BE PLACED WITHIN THE TREE PROTECTION ZONE. NO ASHES, DEBRIS, OR GARBAGE MAY BE DUMPED OR BURIED WITHIN THE TREE PROTECTION ZONE.

17. MAINTAIN FIRE-SAFE AREAS AROUND FENCED AREA. ALSO, NO HEAT SOURCES, FLAMES, IGNITION SOURCES, OR SMOKING IS ALLOWED NEAR MULCH OR TREES.

18. DO NOT RAISE THE SOIL LEVEL WITHIN THE DRIP LINES TO ACHIEVE POSITIVE DRAINAGE, EXCEPT TO MATCH GRADES WITH SIDEWALKS AND CURBS, AND IN THOSE AREAS, FEATHER THE ADDED TOPSOIL BACK TO EXISTING GRADE AT APPROXIMATELY 3:1 SLOPE.

19. REMOVE THE ROOT WAD FOR EACH TREE THAT IS INDICATED ON THE PLAN AS BEING REMOVED.

20. EXCEPTIONS TO THE TREE PROTECTION SPECIFICATIONS MAY ONLY BE GRANTED IN EXTRAORDINARY CIRCUMSTANCES WITH WRITTEN APPROVAL FROM THE LANDSCAPE ARCHITECT PRIOR TO ANY WORK COMMENCING.

21. AS A PROTECTIVE MEASURE TO COMPENSATE FOR CONSTRUCTION IMPACTS, TWO TO SIX WEEKS PRIOR TO CONSTRUCTION, ALL RETAINED TREES SHOWN ON THIS PLAN SHALL RECEIVE AN APPLICATION OF MYCOAPPLY ALL PURPOSE SOLUBLE PER MANUFACTURER'S INSTRUCTIONS. THIS MYCORRHIZAE PRODUCT IS A SPECIALLY FORMULATED NATURAL ROOT BIOSTIMULANT WHICH ENHANCES THE ABSORPTIVE SURFACE AREA OF THE TREES' ROOT SYSTEMS. THIS PROMOTES AND IMPROVES NUTRIENT AND WATER UPTAKE CAPABILITIES OF THE REMAINING ROOT STRUCTURE. DISTRIBUTE MYCOAPPLY EVENLY WITHIN THE ACTIVE ROOT ZONE OF RETAINED TREES. APPLY 30 GALS. OF SOLUTION PER TREE 6" DBH AND GREATER, A MINIMUM OF 4" BELOW SOIL SURFACE IN QUANTITIES OF 1/2 GALLON AT EACH POINT OF APPLICATION. LOCATE THE ACTIVE ROOT ZONES WITH LANDSCAPE ARCHITECT PRESENT. MYCOAPPLY IS AVAILABLE FROM MYCORRHIZAL APPLICATION, INC., PHONE (541) 476-3985.

LAYOUT NOTES:

1. WRITTEN DIMENSIONS TAKE PRECEDENCE OVER SCALED DIMENSIONS.

2. CONTRACTOR SHALL VERIFY ALL DIMENSIONS, GRADES AND CONDITIONS PRIOR TO COMMENCING WORK AND SHALL NOTIFY OWNER'S REPRESENTATIVE OF DISCREPANCIES.

3. WHERE 'VERIFY' OR 'FIELD VERIFY' IS USED IN CONJUNCTION WITH A DIMENSION, THE CONTRACTOR SHALL VERIFY THE MEASUREMENT PRIOR TO BEGINNING THE WORK. IMMEDIATELY BRING DISCREPANCIES TO THE ATTENTION OF THE OWNER'S REPRESENTATIVE.

4. DIMENSIONS ARE TAKEN FROM FACE OF BUILDING. COLUMN GRID LINE, BACK OF CURB OR WALL UNLESS OTHERWISE NOTED.

5. ALL CURVES SHALL BE SMOOTH AND CONTINUOUS WITH NO ABRUPT CHANGES IN DIRECTION OR ARC.

6. CONTRACTOR TO VERIFY EXISTING FINISH GRADES WHERE PLANTER WALLS ARE LOCATED. FINAL GRADES MAY BE DIFFERENT THAN DESIGN GRADES SHOWN. SEE CIVIL DRAWINGS FOR GRADING INFORMATION. CONTRACTOR TO BRING ANY GRADE DISCREPANCIES TO THE ATTENTION OF THE LANDSCAPE ARCHITECT AND/OR CIVIL ENGINEER FOR REVIEW, AS IT AFFECTS WALL HEIGHTS.

7. CONTRACTOR SHALL PROVIDE POSITIVE DRAINAGE ON ALL PAVED SURFACES, AWAY FROM ALL BUILDINGS, STRUCTURES, AND POSTS. ENSURE THAT NO PONDING OF WATER OCCURS.

8. ALL UTILITY HATCHES, COVERS AND BOXES SHALL RESIDE IN PLANTING AREAS OR PAVING AREAS, NOT IN BOTH. ALIGN HATCHES AND CENTER UTILITIES IN PAVING SCORE PATTERNS.

GENERAL NOTES:

1. CONSTRUCTION SHALL MEET ALL APPLICABLE STATE AND LOCAL CODES.

2. PROVIDE WRITTEN NOTIFICATION OF ANY DISCREPANCIES BETWEEN EXISTING AND PROPOSED SITE IMPROVEMENTS.

3. VERIFY EXISTING SITE INFORMATION, INCLUDING GRADES, UTILITIES, PROPERTY LINES, SETBACKS, EASEMENTS, LIMITS OF ROADWAYS, CURBS AND GUTTERS.

4. ALL MATERIALS, FINISHES, MANUFACTURED ITEMS AND EQUIPMENT SHALL BE INSTALLED IN FULL ACCORDANCE WITH THE SUPPLIER'S OR MANUFACTURER'S WRITTEN RECOMMENDATIONS OR THESE DOCUMENTS, WHICHEVER IS MOST STRINGENT.

5. PROVIDE CONSTRUCTION BARRIERS AS REQUIRED. PROTECT ADJACENT PROPERTY.

6. INFORMATION ON THE DRAWINGS RELATIVE TO EXISTING CONDITIONS IS APPROXIMATE ONLY. DRAWINGS ARE GENERALLY DIAGRAMMATIC AND INDICATIVE OF THE WORK TO BE INSTALLED. BEFORE PROCEEDING WITH ANY WORK, THE CONTRACTOR SHALL CHECK AND VERIFY ALL EXISTING CONDITIONS AND INFORM THE LANDSCAPE ARCHITECT OF ANY DISCREPANCY BETWEEN THE DRAWINGS AND ACTUAL CONDITIONS. THE CONTRACTOR SHALL EXERCISE CARE IN EXCAVATING AND WORKING NEAR EXISTING UTILITIES AND STRUCTURES.

7. ALL DRAIN LINES, IRRIGATION SUPPLY LINES, CONDUIT, SLEEVES, POWER AND WATER SERVICE POINTS SHALL BE IN PLACE PRIOR TO INSTALLATION OF SITE LANDSCAPE CONSTRUCTION.

8. SLEEVE LOCATIONS ARE DIAGRAMMATIC. CONTRACTOR SHALL VERIFY SLEEVING LOCATIONS AND COORDINATE WITH THE OWNER'S REPRESENTATIVE.

9. CAP ALL UNUSED SLEEVES.

10. CONTRACTOR SHALL COORDINATE WALL AND CURB PENETRATIONS FOR INSTALLATION OF WATERPROOFING, SLEEVES CONDUIT AND ANCHOR BOLTS.

11. SEE ARCHITECTURAL DRAWINGS (SAD) FOR BUILDING INFORMATION.

12. SEE STRUCTURAL DRAWING (SSD) FOR STRUCTURAL INFORMATION.

13. SEE CIVIL DRAWINGS (SCD) FOR SITE DRAINAGE, GRADING, HARDSCAPE, ADA, AND STORMWATER MANAGEMENT.

14. SCALE APPLIES TO FULL-SIZED DRAWINGS ONLY. DO NOT SCALE FROM REDUCED DRAWINGS.

PLANTING NOTES:

1. PLANT MATERIAL LOCATIONS SHOWN ARE DIAGRAMMATIC AND MAY BE SUBJECT TO CHANGE IN THE FIELD BY THE LANDSCAPE ARCHITECT. PLANT LOCATIONS ARE TO BE ADJUSTED IN THE FIELD AS NECESSARY TO SCREEN UTILITIES BUT NOT TO BLOCK WINDOWS, SIGNS, NOR IMPEDE ACCESS.

2. TREE PLANTING AND INSTALLATION WITHIN RIGHT OF WAY IS SUBJECT TO CITY OF ASHLAND CODES AND STANDARDS.

3. INSTALL STREET TREES WITH ROOT BARRIERS AS REQUIRED BY THE CITY OF ASHLAND.

4. TREES ARE MEANT TO ALIGN WITH EACH OTHER UNLESS INDICATED OTHERWISE.

5. TREE LOCATIONS NEED TO BE STAKED AND APPROVED BY LANDSCAPE ARCHITECT BEFORE PLANTING. TREES AT BUILDING FACADE ARE NOT TO BLOCK WINDOWS AND MAY BE ADJUSTED IN THE FIELD.

6. ALL GROUNDCOVER PLANTING AREAS ARE EXPECTED TO UNIFORMLY COVER THE PLANTING AREA IN TWO (2) YEARS. ALL SHRUB PLANTING AREAS ARE EXPECTED TO UNIFORMLY COVER THE PLANTING AREA IN FIVE (5) YEARS.

7. FINISH GRADE OF ALL SHRUB AREAS ON SITE SHALL BE 1-1/2 INCHES BELOW ADJACENT PAVING OR HEADER.

8. ALL LANDSCAPE PLANTING AREAS SHALL RECEIVE CLEAN, SANDY LOAM TOPSOIL TO A MINIMUM DEPTH OF 12" OR AS NOTED ON THE PLAN.

9. ALL PROPOSED PARKING LOT TREES WILL HAVE A MINIMUM OF (2) CUBIC FEET OF SOIL VOLUME FOR EACH SQUARE FOOT OF TREE CANOPY AT MATURITY. SOIL VOLUME WILL BE ACHIEVED BY MEANS OF TOPSOIL IN PLANTERS AND STRUCTURAL SOIL UNDER IMPERVIOUS SURFACES.

10. MATURE COMPOST SHALL BE ADDED TO THE TOPSOIL OF LANDSCAPING AREAS AT A RATE OF THREE CUBIC YARDS OF COMPOST PER 1,000 SQUARE FEET OF LANDSCAPING AREA TO BE PLANTED.

11. ALL NEW PLANTING AREA SHALL HAVE A MINIMUM OF 3" DEPTH LAYER OF UNSETTLED ORGANIC MULCH APPLIED. STABILIZING MULCH PRODUCTS SHALL BE APPLIED TO SLOPES OF 3 TO 1 OR GREATER.

12. PLANT MATERIAL LOCATED WITHIN VISION CLEARANCE AREAS SHALL NOT CREATE AN OBSTRUCTION BETWEEN 2.5 FEET AND 8 FEET ABOVE ADJACENT CURB HEIGHT. SEE SPECIFICATIONS FOR ADDITIONAL REQUIREMENTS.

WATER USE NOTES:

1. ALL PLANT GROUPS ARE LAID OUT BY HYDROZONES DEPENDING ON WATER NEEDS. ALL PLANTINGS ARE TO BE WATERED BY ROTOR, DRIP, AND BUBBLER IRRIGATION.

2. ALLOW ONE VALVE MINIMUM PER HYDROZONE IN EACH PLANTER.

3. ALLOW ONE OVERFLOW DRAIN AND DRAIN PER PLANTER. COORDINATE WITH PLUMBER AND ASSOCIATED TRADES.

4. ALL PLANTING AREAS SHALL BE SERVED BY A DESIGNATED DOMESTIC WATER METER AND A CITY OF ASHLAND APPROVED BACKFLOW PREVENTION DEVICE.

5. CONNECT TO WEATHER BASED CONTROLLER. COORDINATE WITH CLIENT REPRESENTATIVE.

6. SEE IRRIGATION DRAWINGS FOR FURTHER NOTES AND INFORMATION.

LANDSCAPE SHEET INDEX

L0.0	NOTES + ABBREVIATIONS	L4.2	LANDSCAPE PLANTING PLAN
L0.1	TREE PROTECTION + REMOVAL PLAN	L4.3	PLANTING DETAILS
L0.2	MATERIALS LEGEND	L5.0	IRRIGATION NOTES & LEGENDS
L1.0	OVERALL LANDSCAPE SITE PLAN	~~L5.1~~	LANDSCAPE IRRIGATION PLAN
~~L1.1~~	LANDSCAPE MATERIALS PLAN	L5.2	LANDSCAPE IRRIGATION PLAN
L1.2	LANDSCAPE MATERIALS PLAN	L5.3	IRRIGATION DETAILS
L2.0	LANDSCAPE LAYOUT PLAN	L5.4	IRRIGATION DETAILS
L2.1	LANDSCAPE ENLARGED LAYOUT PLAN	L5.5	IRRIGATION DETAILS
L4.0	PLANT PALETTE	L7.0	LANDSCAPE DETAILS
L4.0B	PLANT IMAGES	L7.1	LANDSCAPE DETAILS
~~L4.1~~	LANDSCAPE PLANTING PLAN	L7.2	LANDSCAPE DETAILS

TERRAIN
LANDSCAPE ARCHITECTURE
310 Oak Street, Suite 3
Ashland, Oregon 97520
541.500.4776
TERRAINARCH.COM

CALDERA OAKS SUBDIVISION
300 CLAY STREET
ASHLAND, OR 97520

REGISTERED LANDSCAPE ARCHITECT
REG. # 0596
Piper von Chamier
OREGON
03/11/2004

REVISIONS

#	DATE	DESCRIPTION
-		
-		
-		
-		
-		

PERMIT SET

NOTES + ABBREVIATIONS

L0.0

PROJECT NO. 2516
07.03.2025
TEAM: SB, EG

1 TREE PROTECTION AND REMOVAL PLAN
Scale: 1" = 30'-0" (34x22 SHEET SIZE)

NOTES:
SEE SHEET L0.0 FOR TREE PROTECTION AND REMOVAL NOTES
SEE CIVIL DRAWINGS FOR DEMOLITION AND EROSION CONTROL PLANS

EXISTING TREE INVENTORY

TREE #	TREE TYPE	DBH	REMOVE / PRESERVE	NOTES
1068	CONIFER	16"	PRESERVE	OFF-SITE
1069	CONIFER	13"	PRESERVE	OFF-SITE
1073	CONIFER	10"	PRESERVE	OFF-SITE
1074	CONIFER	10"	PRESERVE	OFF-SITE
1075	CONIFER	16"	PRESERVE	OFF-SITE
1079	CONIFER	15"	PRESERVE	OFF-SITE
1080	CONIFER	15"	PRESERVE	OFF-SITE
1083	CONIFER	12"	PRESERVE	OFF-SITE
1199	OAK	16"	REMOVE	DEAD
1215	DECIDUOUS	8"	REMOVE	IN NEW ALLEY
1216	DECIDUOUS	8"	REMOVE	IN NEW ALLEY
1376	DECIDUOUS	3"	PRESERVE	OFF-SITE
1377	DECIDUOUS	3"	PRESERVE	OFF-SITE
1380	DECIDUOUS	3"	PRESERVE	OFF-SITE
1416	APPLE	14"	REMOVE	IN NEW DEVELOPMENT
1417	APPLE	6"	REMOVE	IN NEW DEVELOPMENT
1431	DECIDUOUS	6"	REMOVE	IN NEW DEVELOPMENT
1443	CONIFER	18"	REMOVE	IN NEW DEVELOPMENT
1459	DECIDUOUS	10"	REMOVE	GROUP X3; IN NEW DEV.
1934	DECIDUOUS	18"	REMOVE	SPLIT X5; IN NEW ALLEY
9001	DECIDUOUS	16"	PRESERVE	OFF-SITE, WETLAND
9002	DECIDUOUS	15"	PRESERVE	OFF-SITE, WETLAND
9003	DECIDUOUS	18"	PRESERVE	OFF-SITE, WETLAND
9004	CONIFER	12"	PRESERVE	OFF-SITE

NOTE: TREE LOCATIONS AND SIZES ARE BASED ON SITE SURVEY BY TERRASURVEY, INC. DATED 07-12-2022.

TREE PROTECTION + REMOVAL PLAN LEGEND

SYMBOL	DESCRIPTION
#1083	TREE TO REMAIN APPROXIMATE DBH TRUNK AND DRIPLINE SHOWN
#1459	TREE TO REMOVE
	TREE PROTECTION FENCE SEE DETAIL 2, THIS SHEET

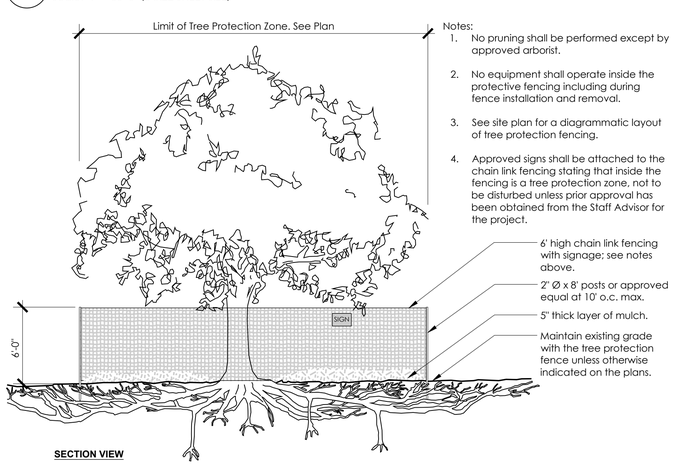

Notes:
1. No pruning shall be performed except by approved arborist.
2. No equipment shall operate inside the protective fencing including during fence installation and removal.
3. See site plan for a diagrammatic layout of tree protection fencing.
4. Approved signs shall be attached to the chain link fencing stating that inside the fencing is a tree protection zone, not to be disturbed unless prior approval has been obtained from the Staff Advisor for the project.

2 DETAIL: TREE PROTECTION FENCE
Scale: 1/4"= 1'-0"

D-TP-02.dwg

TERRAIN
LANDSCAPE ARCHITECTURE
310 Oak Street, Suite 3
Ashland, Oregon 97520
541.500.4776
TERRAINARCH.COM

CALDERA OAKS SUBDIVISION
300 CLAY STREET
ASHLAND, OR 97520

REGISTERED LANDSCAPE ARCHITECT
REG. # 0596
Piper von Chamier
OREGON
03/11/2004

REVISIONS
DATE DESCRIPTION
-
-
-
-
-

PERMIT SET

TREE PROTECTION + REMOVAL PLAN

L0.1

PROJECT NO. 2516
07.03.2025
TEAM: SB, EG

MATERIALS LEGEND

PAVING + EDGING

CALLOUT	SYMBOL	DESCRIPTION	DETAIL	MANUFACTURER	PRODUCT	MATERIAL / COLOR / FINISH	SIZE	QTY.	NOTES
PV-1		CONCRETE PAVING	SCD	POURED IN PLACE CONCRETE BY CONTRACTOR	POURED IN PLACE CONCRETE	CONCRETE / NATURAL GRAY / BROOM FINISH	SCD	SCD	SEE CIVIL DRAWINGS FOR CONCRETE DETAILS
PV-2		ASPHALT PAVING	SCD	ASPHALT PAVING BY CONTRACTOR	ASPHALT PAVING	ASPHALT PAVING	SCD	SCD	SEE CIVIL DRAWINGS FOR ASPHALT DETAILS
PV-3		DECOMPOSED GRANITE (DG) PAVING	1/L7.0	HILTON LANDSCAPE SUPPLY OR EQUAL	STABILIZED DECOMPOSED GRANITE PAVING	DECOMPOSED GRANITE PAVING / COLOR GOLD / ORGANIC BINDER	3" DEPTH	TBD	INSTALL DG PAVING TO BE FIRM, STABLE & SLIP RESISTANT FOR ADA ACCESSIBILITY. NOTE: QTY FOR DG AS MULCH IS LISTED SEPARATELY
PV-4		GRAVEL MULCH BAND	3/L7.0	HILTON LANDSCAPE SUPPLY OR EQUAL	PAMI PEBBLE	PAMI PEBBLE DECORATIVE RIVER ROCK	2"-3" STONES 4" DEPTH	TBD	INSTALL A BAND AROUND MULTIFAMILY BUILDING PERIMETERS PER DETAIL.
PV-5		PLAYGROUND BARK (ENGINEERED WOOD FIBER)	3/L7.2	HILTON LANDSCAPE SUPPLY	CERTIFIED PLAYGROUND CHIPS	ENGINEERED WOOD FIBER (EWF)	PER MFR	TBD	AVAILABLE AT HILTON LANDSCAPE SUPPLY, (541) 664-3374
E-1		METAL EDGING	2/L7.0	PERMALOC OR EQUAL	CLEANLINE XL OR EQUAL	ALUMINUM / COLOR BLACK / DURAFLEX	3/16" X 5" HIGH	TBD	EDGING TO CONTAIN DG PAVING, GRAVEL MULCH BANDS, AND TO SEPARATE LAWN FROM PLANTING
E-2		LOG & BOULDER BORDERS	8/L7.1 1/L7.2 2/L7.2	HILTON LANDSCAPE SUPPLY / HOMESTEAD LOG HOMES	EMBEDDED NATURAL STONE BOULDERS / WOOD LOG AND FULL-ROUND STEPPERS	GRANITE / SALT & PEPPER BOULDERS FOHC DOUGLAS FIR / LATHE TURNED / CLEAR WOOD SEALER	BOULDERS ±24" - 48" LOGS 12-18"Ø X 8'	TBD	LOGS AND BOULDERS TO CONTAIN PLAYGROUND BARK

FENCES + GATES

CALLOUT	SYMBOL	DESCRIPTION	DETAIL	MANUFACTURER	PRODUCT	MATERIAL / COLOR / FINISH	SIZE	QTY.	NOTES
F-1		CONTEMPORARY RESIDENTIAL FENCES & GATES	7/L7.1	CATALYST FENCE SOLUTIONS	LARGO SEMI-PRIVATE HORIZONTAL FENCE	VYNIL / SIERRA BLEND / CONTEMPORARY POST CAPS	4' HEIGHT THROUGHOUT	TBD	FENCES SHALL MEET AMC 18.4.4.060. WHERE ADJACENT TO OPEN SPACE, 4' HIGH MAX.
F-2		SOLID NEIGHBOR FENCE	6/L7.1	BY CONTRACTOR	GOOD NEIGHBOR CEDAR FENCE	WESTERN RED CEDAR / PRESSURE TREATED POSTS	6.5' HIGH MAX SIDE/REAR YARD	TBD	EXG FENCES TO REMAIN WHERE POSSIBLE; REPLACE AS NEEDED. FENCES SHALL MEET AMC SECTION 18.4.4.060.

SITE FURNISHINGS

CALLOUT	SYMBOL	DESCRIPTION	DETAIL	MANUFACTURER	PRODUCT	MATERIAL / COLOR / FINISH	SIZE	QTY.	NOTES
A-1		ACCESSIBLE PICNIC TABLE	7/L7.0	VICTOR STANLEY	PT-2 PARSON TABLE	STEEL / COLOR BLACK | WOOD / IPE	70" X 62.5" X 29.25"	2	SURFACE MOUNT PER MANUFACTURER'S INSTRUCTIONS. SCD FOR CONCRETE DETAILS.
A-2		TRASH RECEPTACLE	3/L7.1	DUMOR FURNISHINGS	70-22I-SO	STEEL / COLOR BLACK | WOOD / IPE	22 GAL	1	SURFACE MOUNT PER MANUFACTURER'S INSTRUCTIONS. SCD FOR CONCRETE DETAILS.
A-3		DOG WASTE STATION	5/L7.1	DOG-ON-IT PARKS OR EQUAL	COMPLETE DOG WASTE STATION ONEPUL MODEL 7408S, W/ ROUND RECEPTACLE, EMBED	GALVANIZED STEEL /GREEN / POWDERCOAT	TBD	4	EMBED POST IN CONCRETE FOOTING PER MANUFACTURER'S INSTRUCTIONS. CONTRACTOR TO CONFIRM OPTIONAL SIGNS OR ACCESSORIES W/ OWNER.
A-4		BENCH	2/L7.1	DUMOR FURNISHINGS	270-60I	STEEL / COLOR BLACK | WOOD / IPE	71" X 27-3/8" X 32-13/16"	1	INSTALL PER MANUFACTURERS RECOMMENDATIONS
A-5		ACCESSIBLE BBQ GRILL	8/L7.0	PILOT ROCK OR EQUAL	AWS-20 B2	STEEL / HIGH TEMP NON-TOXIC BLACK ENAMEL PAINT BY MFR	15-1/8" X 19-3/8" X 33-5/16"	1	SURFACE MOUNT; INSTALL W/ ANCHOR KIT MODEL ANC1-4, OR (4) 1/2" x 3" SCREW ANCHORS FOR SURFACE INSTALLATION. SCD FOR CONCRETE DETAILS.
A-6		STANDARD BIKE RACK	5/L7.0	DERO OR EQUAL	AR-FT	2" STEEL PIPE / COLOR BLACK / POWDERCOAT	31-9/16" X 36"	8	SURFACE MOUNT ON CONCRETE PER MANUFACTURER'S INSTRUCTIONS. SCD FOR CONCRETE DETAILS.
A-7		BIKE HANGERS	6/L7.0	THE PARK	509-2037	STEEL / COLOR BLACK / POWDERCOAT	3-1/2" X 10" X 5.75" W/ 48" LOCKING CABLE	16	MOUNTED ON PORCH WALLS, SEE ARCHITECTURAL DRAWINGS.
A-8		CLUSTER MAILBOX	4/L7.1	MAILBOXES.COM OR EQ PER USPS STANDARDS	TBD	TBD	TBD	TBD	SURFACE MOUNT PER MANUFACTURER'S INSTRUCTIONS. SCD FOR CONCRETE DETAILS.
A-9		NATURE PLAY AREA	8/L7.1	BY CONTRACTOR	LOG STEPPERS, HAND LOG SCRAMBLE OR SIMILAR	WOOD LOG COMPONENTS WITH STEEL HARDWARE	SEE DETAILS	SEE DETAILS	

SITE LIGHTING

CALLOUT	SYMBOL	DESCRIPTION	DETAIL	MANUFACTURER	PRODUCT	MATERIAL / COLOR / FINISH	SIZE	QTY.	NOTES
L-1		BOLLARD LIGHT	1/L7.1	SPITZER LIGHTING OR EQUAL	BRA-C24-24LC-U-CC-T5-C1-BK	ALUMINUM / MATTE BLACK / POWDERCOAT	±7.1" Ø X 24" H	32	CONTRACTOR TO COORD. LIGHTING AND ELECT. WORK; VERIFY ELECT. SUPPLY AND DRIVER FOR FIXTURE PRIOR TO ORDERING. FINAL QTY TBD. SSD FOR FOOTING.
L-2		STREET LIGHT, FOR REFERENCE ONLY	SCD	BY ENGINEER, SEE CIVIL DWGS	SCD	SCD	SCD	SCD	

LANDSCAPE STRUCTURES

CALLOUT	SYMBOL	DESCRIPTION	DETAIL	MANUFACTURER	PRODUCT	MATERIAL / COLOR / FINISH	SIZE	QTY.	NOTES
S-1		BIKE PARKING SHELTER		BY CONTRACTOR, SEE ARCHITECTURAL DRAWINGS	SEE ARCHITECTURAL DRAWINGS FOR PRODUCT INFORMATION	SEE ARCHITECTURAL DRAWINGS FOR MATERIAL FINISH INFORMATION	±10' X 15'	2	SEE ARCHITECTURAL SHEET AJ9.5 FOR CANOPY DETAILS.

TERRAIN
LANDSCAPE ARCHITECTURE
310 Oak Street, Suite 3
Ashland, Oregon 97520
541.500.4776
TERRAINARCH.COM

CALDERA OAKS SUBDIVISION
300 CLAY STREET
ASHLAND, OR 97520

REGISTERED LANDSCAPE ARCHITECT
REG. # 0596
Piper von Chamier
OREGON
03/11/2004

REVISIONS

#	DATE	DESCRIPTION
-		
-		
-		
-		
-		

PERMIT SET

MATERIALS LEGEND

L0.2

PROJECT NO. 2516
07.03.2025
TEAM: SB, EG

1 OVERALL SITE PLAN
Scale: 1" = 30'-0" (34x22 SHEET SIZE)

TERRAIN
LANDSCAPE ARCHITECTURE
310 Oak Street, Suite 3
Ashland, Oregon 97520
541.500.4776
TERRAINARCH.COM

CALDERA OAKS SUBDIVISION
300 CLAY STREET
ASHLAND, OR 97520

REGISTERED LANDSCAPE ARCHITECT
REG. # 0596
Piper von Chamier
OREGON
03/11/2004

REVISIONS

#	DATE	DESCRIPTION
-		
-		
-		
-		
-		

PERMIT SET

OVERALL SITE PLAN

L1.0

PROJECT NO. 2516
07.03.2025
TEAM: SB, EG

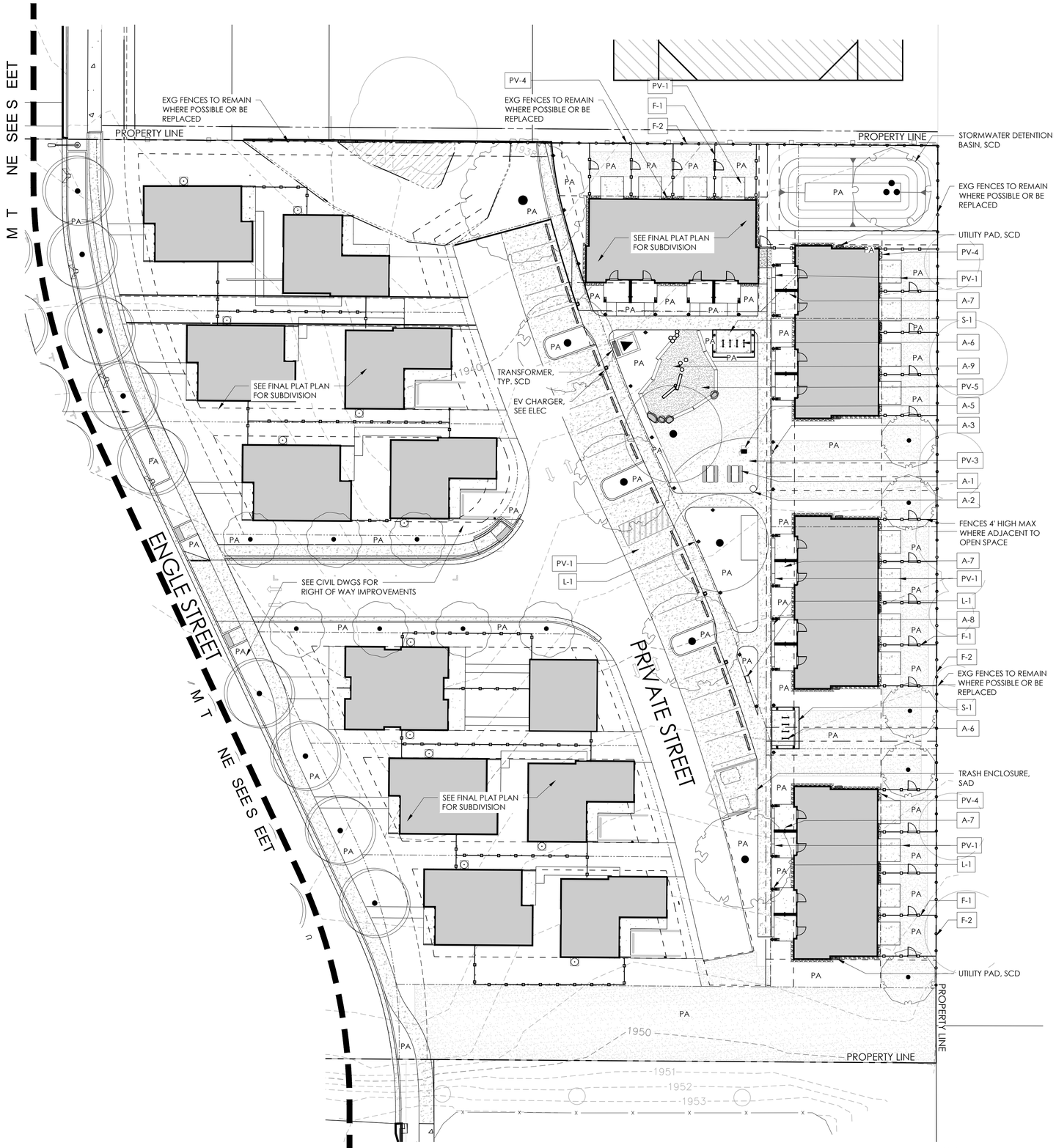

1 **LANDSCAPE MATERIALS PLAN**
Scale: 1" = 20'-0" (34x22 SHEET SIZE)

SCALE: 1" = 20'-0"
0' 10' 20' 40' 60'

MATERIALS LEGEND

PAVING + EDGING

CALLOUT	SYMBOL	DESCRIPTION
PV-1		CONCRETE PAVING
PV-2		ASPHALT PAVING
PV-3		DECOMPOSED GRANITE (DG) PAVING
PV-4		GRAVEL MULCH BAND
PV-5		PLAYGROUND BARK (ENGINEERED WOOD FIBER)
E-1		METAL EDGING
E-2		LOG & BOULDER BORDERS

FENCES + GATES

CALLOUT	SYMBOL	DESCRIPTION
F-1		CONTEMPORARY RESIDENTIAL FENCES & GATES
F-2		SOLID NEIGHBOR FENCE

SITE FURNISHINGS

CALLOUT	SYMBOL	DESCRIPTION
A-1		ACCESSIBLE PICNIC TABLE
A-2		TRASH RECEPTACLE
A-3		DOG WASTE STATION
A-4		BENCH
A-5		ACCESSIBLE BBQ GRILL
A-6		STANDARD BIKE RACK
A-7		BIKE HANGERS
A-8		CLUSTER MAILBOX
A-9		NATURE PLAY AREA

SITE LIGHTING

CALLOUT	SYMBOL	DESCRIPTION
L-1		BOLLARD LIGHT
L-2		STREET LIGHT, FOR REFERENCE ONLY

LANDSCAPE STRUCTURES

CALLOUT	SYMBOL	DESCRIPTION
S-1		BIKE PARKING SHELTER

TERRAIN
LANDSCAPE ARCHITECTURE
310 Oak Street, Suite 3
Ashland, Oregon 97520
541.500.4776
TERRAINARCH.COM

CALDERA OAKS SUBDIVISION
300 CLAY STREET
ASHLAND, OR 97520

REGISTERED LANDSCAPE ARCHITECT
REG. # 0596
Piper von Chamier
OREGON
03/11/2004

REVISIONS

#	DATE	DESCRIPTION
-		
-		
-		
-		
-		

PERMIT SET

LANDSCAPE MATERIALS PLAN

L1.2

PROJECT NO. 2516
07.03.2025
TEAM: SB, EG

1 **LANDSCAPE LAYOUT PLAN**
Scale: 1" = 20'-0" (34x22 SHEET SIZE)

SCALE: 1" = 20'-0"
0' 10' 20' 40' 60'

TERRAIN
LANDSCAPE ARCHITECTURE
310 Oak Street, Suite 3
Ashland, Oregon 97520
541.500.4776
TERRAINARCH.COM

CALDERA OAKS SUBDIVISION
300 CLAY STREET
ASHLAND, OR 97520

REGISTERED LANDSCAPE ARCHITECT
REG. # 0596
Piper von Chamier
OREGON
03/11/2004

REVISIONS

#	DATE	DESCRIPTION
-		
-		
-		
-		
-		

PERMIT SET

LANDSCAPE LAYOUT PLAN

L2.0

PROJECT NO. 2516
07.03.2025
TEAM: SB, EG

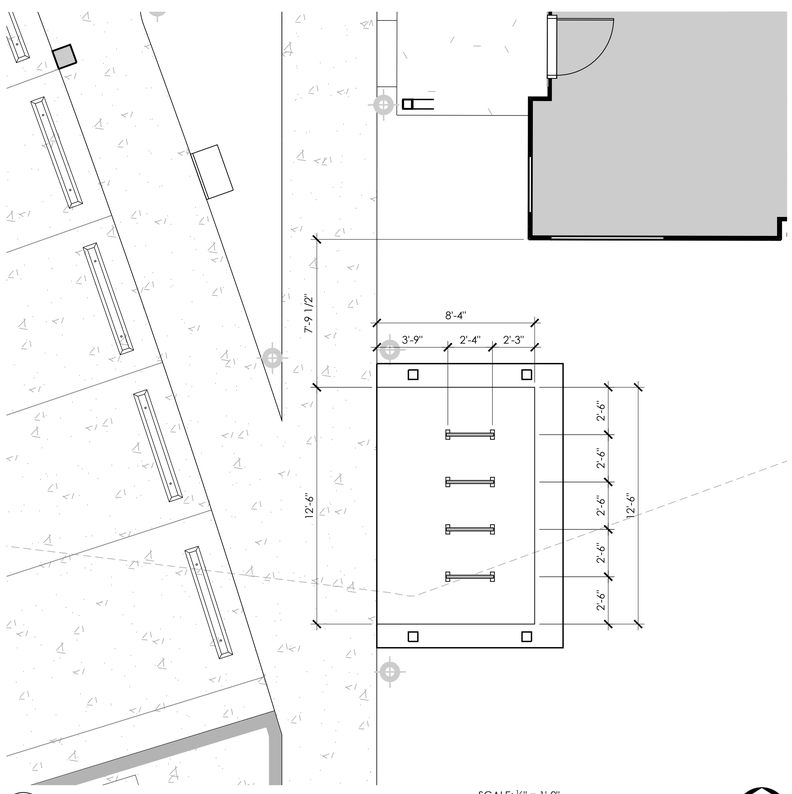

2 **LANDSCAPE ENLARGED LAYOUT PLAN**
Scale: 1/4" = 1'-0" (34x22 SHEET SIZE)

SCALE: 1/4" = 1'-0"
0' 2' 4' 8' 12'

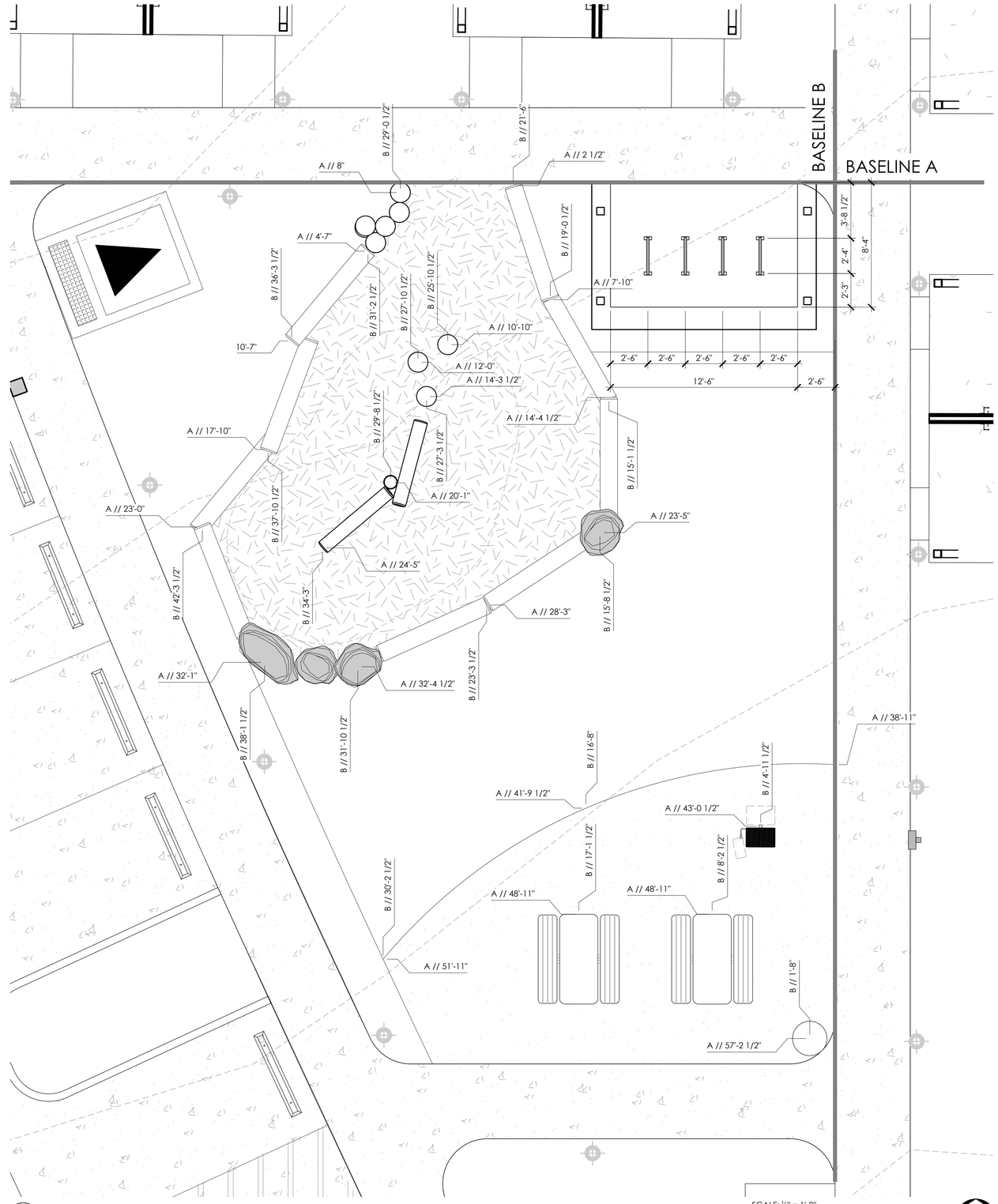

1 **LANDSCAPE ENLARGED LAYOUT PLAN**
Scale: 1/4" = 1'-0" (34x22 SHEET SIZE)

SCALE: 1/4" = 1'-0"
0' 2' 4' 8' 12'

TERRAIN
LANDSCAPE ARCHITECTURE
310 Oak Street, Suite 3
Ashland, Oregon 97520

541.500.4776
TERRAINARCH.COM

CALDERA OAKS SUBDIVISION

300 CLAY STREET
ASHLAND, OR 97520

REGISTERED LANDSCAPE ARCHITECT
REG. # 0596
Piper von Chamier
OREGON
03/11/2004

REVISIONS

#	DATE	DESCRIPTION
-		
-		
-		
-		
-		

PERMIT SET

LANDSCAPE
ENLARGED
LAYOUT PLANS

L2.0

PROJECT NO. 2516
07.03.2025
TEAM: SB, EG

PLANT SCHEDULE

SYMBOL	CODE	BOTANICAL NAME	COMMON NAME	SIZE	SPACING	IRRIGATION	QTY	REMARKS
TREES								
	ACE GRI	ACER GRISEUM	PAPERBARK MAPLE	1-1/2" CAL	SEE PLAN	BUBBLER	5	OPEN SPACE TREE
	BET DUR	BETULA NIGRA `BNMTF`	DURA HEAT® RIVER BIRCH	1-1/2" CAL	SEE PLAN	BUBBLER	1	STORMWATER TREE
	CER JAP	CERCIDIPHYLLUM JAPONICUM	KATSURA TREE	1-1/2" CAL	SEE PLAN	BUBBLER	2	OPEN SPACE TREE
	FRA JUN	FRAXINUS AMERICANA 'JUNGINGER'	AUTUMN PURPLE® WHITE ASH	2" CAL	SEE PLAN	BUBBLER	17	STORMWATER / STREET TREE, PER ASHLAND RECOMMENDED STREET TREE GUIDE
	FRA OXY	FRAXINUS OXYCARPA 'RAYWOOD'	RAYWOOD ASH	2" CAL	SEE PLAN	BUBBLER	11	STREET TREE, PER ASHLAND RECOMMENDED STREET TREE GUIDE
	GLE INE	GLEDITSIA TRIACANTHOS INERMIS 'SKYCOLE'	SKYLINE® HONEY LOCUST	1-3/4" CAL	SEE PLAN	BUBBLER	6	
	MAG KOB	MAGNOLIA KOBUS	KOBUS MAGNOLIA	1-1/2" CAL	SEE PLAN	BUBBLER	2	OPEN SPACE TREE
	PRU VES	PRUNUS CERASIFERA 'KRAUTER VESUVIUS'	KRAUTER VESUVIUS PURPLE-LEAF PLUM	2" CAL	SEE PLAN	BUBBLER	7	STREET TREE, PER ASHLAND RECOMMENDED STREET TREE GUIDE
	QUE KEL	QUERCUS KELLOGGII	CALIFORNIA BLACK OAK	1-1/2" CAL	SEE PLAN	BUBBLER	1	OPEN SPACE TREE
	QUE RUB	QUERCUS RUBRA	NORTHERN RED OAK	2" CAL	SEE PLAN	BUBBLER	13	STREET TREE, PER ASHLAND RECOMMENDED STREET TREE GUIDE
	ZEL GRE	ZELKOVA SERRATA 'GREEN VASE'	GREEN VASE JAPANESE ZELKOVA	2" CAL	SEE PLAN	BUBBLER	4	PARKING LOT TREE, PER ASHLAND RECOMMENDED STREET TREE GUIDE

SYMBOL	CODE	BOTANICAL NAME	COMMON NAME	SIZE	SPACING	IRRIGATION	QTY	REMARKS
SHRUBS								
	ARC MAS	ARCTOSTAPHYLOS UVA-URSI `MASSACHUSETTS`	MASSACHUSETTS KINNIKINNICK	1 GAL	60" o.c.	DRIP	42	FULL, MATCHED PLANTS
BAC	BAC PIG	BACCHARIS PILULARIS 'PIGEON POINT'	PIGEON POINT COYOTE BRUSH	1 GAL	96" o.c.	DRIP	3	FULL, MATCHED PLANTS
	BOU BLO	BOUTELOUA GRACILIS 'BLONDE AMBITION'	BLONDE AMBITION BLUE GRAMA	1 GAL	36" o.c.	DRIP	22	FULL, MATCHED PLANTS
	CAL KAR	CALAMAGROSTIS X ACUTIFLORA `KARL FOERSTER`	KARL FOERSTER FEATHER REED GRASS	1 GAL	36" o.c.	DRIP	19	FULL, MATCHED PLANTS
CHO	CHO XAZ	CHOISYA X DEWITTEANA 'AZTEC PEARL'	AZTEC PEARL MEXICAN ORANGE	5 GAL	96" o.c.	DRIP	14	FULL, MATCHED PLANTS
CIS	CIS WHI	CISTUS X BLANCHE	WHITE ROCKROSE	1 GAL	60" o.c.	DRIP	28	FULL, MATCHED PLANTS
	CIS PUL	CISTUS X PULVERULENTUS `SUNSET`	SUNSET ROCKROSE	1 GAL	60" o.c.	DRIP	24	FULL, MATCHED PLANTS
	COR ISA	CORNUS SERICEA 'ISANTI'	ISANTI RED TWIG DOGWOOD	1 GAL	72" o.c.	DRIP	16	STORMWATER SHRUB
	COR KLS	CORNUS SERICEA 'KELSEYI'	KELSEY'S DWARF RED TWIG DOGWOOD	1 GAL	30" o.c.	SPRAY	54	STORMWATER SHRUB
	DIS ACL	DISTYLIUM X 'PIIDIST-II'	BLUE CASCADE® DISTYLIUM	5 GAL	36" o.c.	DRIP	52	FULL, MATCHED PLANTS
	ERI KRA	ERICA X DARLEYENSIS `KRAMER`S ROTE`	KRAMERS RED DARLEY HEATH	1 GAL	24" o.c.	DRIP	42	FULL, MATCHED PLANTS
	ERI WHI	ERICA X DARLEYENSIS 'WHITE PERFECTION'	WHITE PERFECTION DARLEY HEATH	1 GAL	36" o.c.	DRIP	73	FULL, MATCHED PLANTS
	HEL SEM	HELICTOTRICHON SEMPERVIRENS	BLUE OAT GRASS	1 GAL	36" o.c.	DRIP	38	FULL, MATCHED PLANTS
	LIR BIG	LIRIOPE MUSCARI 'BIG BLUE'	BIG BLUE LILYTURF	1 GAL	18" o.c.	DRIP	36	
	LOR LDO	LOROPETALUM CHINENSE RUBRUM 'KURENAI'	JAZZ HANDS® PINK FRINGE FLOWER	5 GAL	36" o.c.	DRIP	64	FULL, MATCHED PLANTS
	MAH AQU	MAHONIA AQUIFOLIUM	OREGON GRAPE	1 GAL	60" o.c.	DRIP	6	FULL, MATCHED PLANTS
M	MUH RIG	MUHLENBERGIA RIGENS	DEER GRASS	1 GAL	36" o.c.	DRIP	85	FULL, MATCHED PLANTS
	NEP RAC	NEPETA RACEMOSA 'WALKER'S LOW'	WALKER'S LOW CATMINT	1 GAL	36" o.c.	DRIP	45	FULL, MATCHED PLANTS
	PEN HAM	PENNISETUM ALOPECUROIDES 'HAMELN'	HAMELN FOUNTAIN GRASS	1 GAL	30" o.c.	DRIP	41	FULL, MATCHED PLANTS
	PEN KRS	PENNISETUM ORIENTALE `KARLEY ROSE`	KARLEY ROSE FOUNTAIN GRASS	1 GAL	36" o.c.	DRIP	152	FULL, MATCHED PLANTS
	PER LIT	PEROVSKIA ATRIPLICIFOLIA `LITTLE SPIRE`	LITTLE SPIRE RUSSIAN SAGE	1 GAL	24" o.c.	DRIP	52	FULL, MATCHED PLANTS
RHA	RHA EVE	RHAMNUS CALIFORNICA 'EVE CASE'	EVE CASE COFFEEBERRY	5 GAL	72" o.c.	DRIP	44	FULL, MATCHED PLANTS
	RHA BAL	RHAPHIOLEPIS INDICA 'BALLERINA'	BALLERINA INDIAN HAWTHORN	5 GAL	42" o.c.	DRIP	6	FULL, MATCHED PLANTS
	SAL PUR	SALIX PURPUREA 'NANA'	DWARF PURPLE OSIER WILLOW	1 GAL	48" o.c.	SPRAY	20	STORMWATER SHRUB
	SAR RUS	SARCOCOCCA RUSCIFOLIA	FRAGRANT SWEETBOX	5 GAL	48" o.c.	DRIP	17	FULL, MATCHED PLANTS
	SED AUF	SEDUM X `AUTUMN FIRE`	AUTUMN FIRE SEDUM	1 GAL	24" o.c.	DRIP	28	FULL, MATCHED PLANTS
	SPI DOU	SPIRAEA DOUGLASII	WESTERN SPIREA	1 GAL	48" o.c.	SPRAY	48	STORMWATER SHRUB
	SYM ALB	SYMPHORICARPOS ALBUS	COMMON WHITE SNOWBERRY	1 GAL	72" o.c.	SPRAY	3	STORMWATER SHRUB
	TEU COM	TEUCRIUM FRUTICANS `COMPACTUM`	COMPACT BUSH GERMANDER	5 GAL	36" o.c.	DRIP	112	FULL, MATCHED PLANTS
GROUND COVERS								
	PTL PTW	PT LAWN SEED PT 770 WATER LESS ECO-LAWN	WATER LESS ECO-LAWN	SEED	HYDROSEED	SPRAY	15,001 SF	
	SUN WVY	SUNMARK SEEDS NATIVE WATER QUALITY MIX NATIVE WATER QUA	NATIVE WATER QUALITY MIX	SEED	HYDROSEED	SPRAY	231 SF	

TERRAIN
LANDSCAPE ARCHITECTURE
310 Oak Street, Suite 3
Ashland, Oregon 97520

541.500.4776
TERRAINARCH.COM

CALDERA OAKS SUBDIVISION
300 CLAY STREET
ASHLAND, OR 97520

REGISTERED LANDSCAPE ARCHITECT
REG. # 0596
Piper von Chamier
OREGON
03/11/2004

REVISIONS

#	DATE	DESCRIPTION
-		
-		
-		
-		
-		

PERMIT SET

LANDSCAPE PLANT PALETTE

L4.0

PROJECT NO. 2516
07.03.2025
TEAM: SB, EG

TREES

ACER GRISEUM
PAPERBARK MAPLE

BETULA NIGRA 'DURAHEAT'
DURAHEAT RIVER BIRCH

CERCIDIPHYLLUM JAPONICUM
KATSURA TREE

FRAXINUS AMERICANA 'AUTUMN PURPLE'
AUTUMN PURPLE ASH

FRAXINUS OXYCARPA 'RAYWOOD'
RAYWOOD ASH

GINKGO BILOBA 'THE PRESIDENT'
PRESIDENTIAL GOLD MAIDENHAIR TREE

MAGNOLIA KOBUS
KOBUS MAGNOLIA

PRUNUS CERASIFERA 'KRAUTER VESUVIUS'
KRAUTER VESUVIUS PURPLE LEAF PLUM

PRUNUS CERASIFERA 'KRAUTER VESUVIUS'
KRAUTER VESUVIUS PURPLE LEAF PLUM

QUERCUS KELLOGGII
CALIFORNIA BLACK OAK

QUERCUS RUBRA
NORTHERN RED OAK

ZELKOVA SERRATA 'GREEN VASE'
GREEN VASE JAPANESE ZELKOVA

STORMWATER

CORNUS SERICEA 'ISANTI'
ISANTI RED TWIG DOGWOOD

CORNUS 'ISANTI' WINTER COLOR

CORNUS SERICEA 'KELSEYI'
DWARF RED TWIG DOGWOOD

SALIX PURPUREA 'NANA'
DWARF PURPLE OSIER WILLOW

SPIRAEA DOUGLASII
WESTERN SPIREA

SYMPHORICARPOS ALBUS
COMMON WHITE SNOWBERRY

SUNMARK SEEDS NATIVE WATER QUALITY MIX, OR APPROVED EQUAL

SHRUBS, PERENNIALS AND GRASSES

ARCTOSTAPHYLOS UVA-URSI 'MASSACHUSETTS'
MASSACHUSETTS KINNIKINNIK

BACCHARIS PILULARIS 'PIGEON POINT'
PIGEON POINT COYOTE BRUSH

BOUTELOUA GRACILIS 'BLONDE AMBITION'
BLONDE AMBITION BLUE GRAMA

CALAMAGROSTIS X ACUTIFLORA 'KARL FOERSTER'
KARL FOERSTER FEATHER REED GRASS

CHOISYA X DEWITTEANA 'AZTEC PEARL'
AZTEC PEARL MEXICAN ORANGE

CISTUS X 'BLANCHE'
WHITE ROCKROSE

CISTUS X PULVERULENTUS 'SUNSET'
SUNSET ROCKROSE

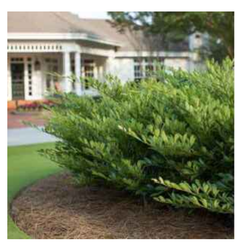
DISTYLIUM 'BLUE CASCADE'
BLUE CASCADE DISTYLIUM

ERICA X DARLYENSIS 'KRAMER'S ROTE'
KRAMERS RED DARLEY HEATH

ERICA X DARLEYENSIS 'WHITE PERFECTION'
WHITE PERFECTION DARLEY HEATH

HELICTOTRICHON SEMPERVIRENS
BLUE OAT GRASS

LOROPETALUM 'JAZZ HANDS PINK'
JAZZ HANDS PINK FRINGEFLOWER

MAHONIA AQUIFOLIUM
OREGON GRAPE

MUHLENBERGIA RIGENS
DEER GRASS

NEPETA RACEMOSA 'WALKER'S LOW'
WALKER'S LOW CATMINT

PENNISETUM ALOPECUROIDES 'HAMELN'
HAMELN FOUNTAIN GRASS

PENNISETUM ORIENTALE 'KARLEY ROSE'
KARLEY ROSE FOUNTAIN GRASS

PEROVSKIA ATRIPLICIFOLIA 'LITTLE SPIRE'
LITTLE SPIRE RUSSIAN SAGE

RHAMNUS CALIFORNICA 'EVE CASE'
EVE CASE COFFEEBERRY

RHAPHIOLEPIS INDICA 'BALLERINA'
BALLERINA INDIAN HAWTHORN

SARCOCOCCA RUSCIFOLIA
FRAGRANT SWEETBOX

SEDUM X 'AUTUMN FIRE'
AUTUMN FIRE STONECROP

TEUCRIUM FRUTICANS 'COMPACTA'
COMPACT BUSH GERMANDER

ECO TURF

PROTIME SEED PT 769 R&R ECO-TURF MIX WITH MICROCLOVER, OR APPROVED EQUAL

TERRAIN
LANDSCAPE ARCHITECTURE
310 Oak Street, Suite 3
Ashland, Oregon 97520

541.500.4776
TERRAINARCH.COM

CALDERA OAKS SUBDIVISION
300 CLAY STREET
ASHLAND, OR 97520

REGISTERED LANDSCAPE ARCHITECT
REG. # 0596
Piper von Chamier
OREGON
03/11/2004

REVISIONS

#	DATE	DESCRIPTION
-		
-		
-		
-		
-		

PERMIT SET

PLANT IMAGES

L4.0B

PROJECT NO. 2516
07.03.2025
TEAM: SB, EG

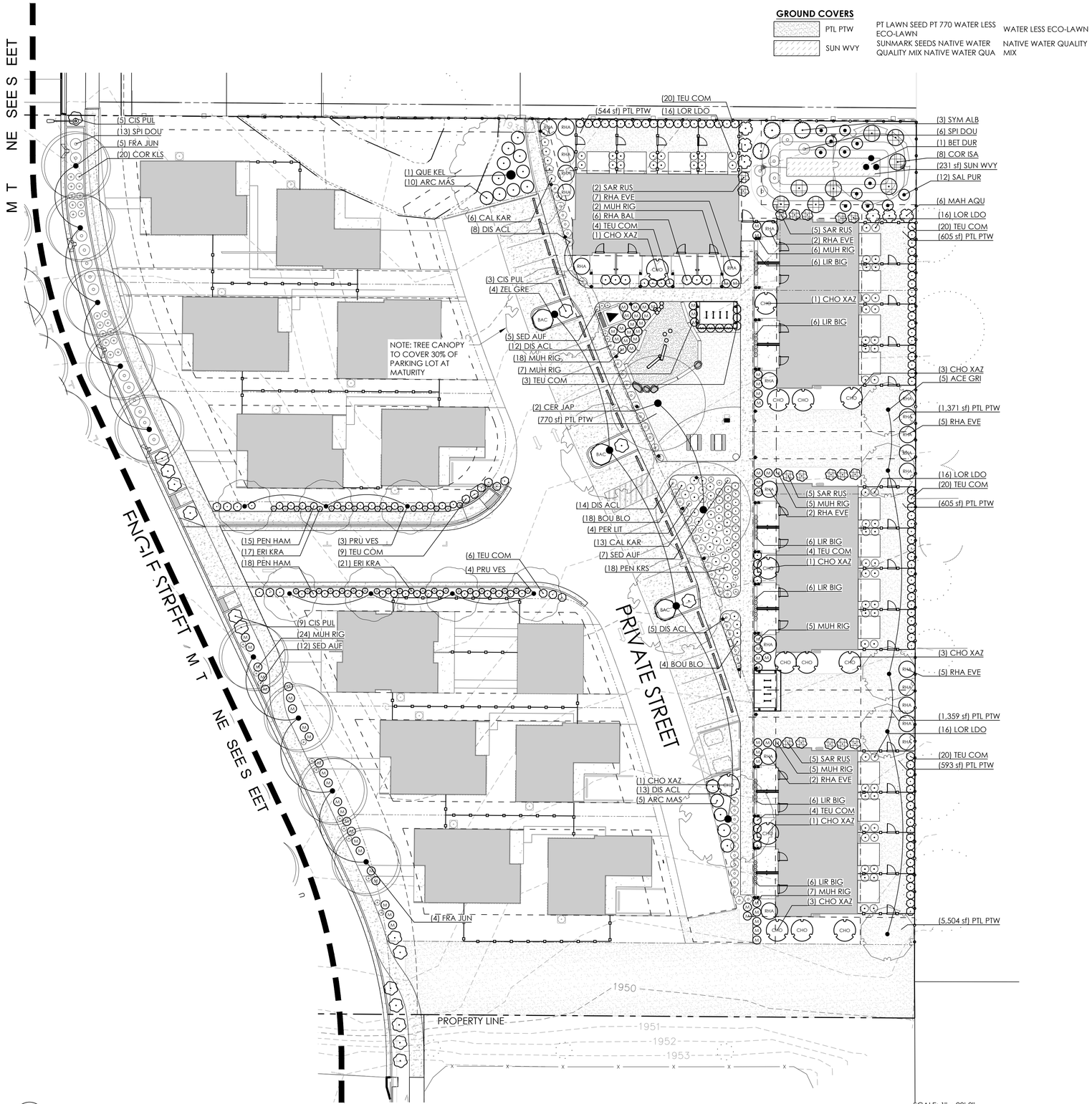

1 **LANDSCAPE PLANTING PLAN**
Scale: 1" = 20'-0" (34x22 SHEET SIZE)

PLANT SCHEDULE

SYMBOL	CODE	BOTANICAL NAME	COMMON NAME
TREES			
	ACE GRI	ACER GRISEUM	PAPERBARK MAPLE
	BET DUR	BETULA NIGRA `BNMTF`	DURA HEAT® RIVER BIRCH
	CER JAP	CERCIDIPHYLLUM JAPONICUM	KATSURA TREE
	FRA JUN	FRAXINUS AMERICANA 'JUNGINGER'	AUTUMN PURPLE® WHITE ASH
	FRA OXY	FRAXINUS OXYCARPA 'RAYWOOD'	RAYWOOD ASH
	GLE INE	GLEDITSIA TRIACANTHOS INERMIS 'SKYCOLE'	SKYLINE® HONEY LOCUST
	MAG KOB	MAGNOLIA KOBUS	KOBUS MAGNOLIA
	PRU VES	PRUNUS CERASIFERA 'KRAUTER VESUVIUS'	KRAUTER VESUVIUS PURPLE-LEAF PLUM
	QUE KEL	QUERCUS KELLOGGII	CALIFORNIA BLACK OAK
	QUE RUB	QUERCUS RUBRA	NORTHERN RED OAK
	ZEL GRE	ZELKOVA SERRATA 'GREEN VASE'	GREEN VASE JAPANESE ZELKOVA

SYMBOL	CODE	BOTANICAL NAME	COMMON NAME
SHRUBS			
	ARC MAS	ARCTOSTAPHYLOS UVA-URSI `MASSACHUSETTS`	MASSACHUSETTS KINNIKINNICK
BAC	BAC PIG	BACCHARIS PILULARIS 'PIGEON POINT'	PIGEON POINT COYOTE BRUSH
	BOU BLO	BOUTELOUA GRACILIS 'BLONDE AMBITION'	BLONDE AMBITION BLUE GRAMA
	CAL KAR	CALAMAGROSTIS X ACUTIFLORA `KARL FOERSTER`	KARL FOERSTER FEATHER REED GRASS
CHO	CHO XAZ	CHOISYA X DEWITTEANA 'AZTEC PEARL'	AZTEC PEARL MEXICAN ORANGE
CIS	CIS WHI	CISTUS X BLANCHE	WHITE ROCKROSE
	CIS PUL	CISTUS X PULVERULENTUS `SUNSET`	SUNSET ROCKROSE
	COR ISA	CORNUS SERICEA 'ISANTI'	ISANTI RED TWIG DOGWOOD
	COR KLS	CORNUS SERICEA 'KELSEYI'	KELSEY'S DWARF RED TWIG DOGWOOD
	DIS ACL	DISTYLIUM X 'PIIDIST-II'	BLUE CASCADE® DISTYLIUM
	ERI KRA	ERICA X DARLEYENSIS `KRAMER'S ROTE`	KRAMERS RED DARLEY HEATH
	ERI WHI	ERICA X DARLEYENSIS 'WHITE PERFECTION'	WHITE PERFECTION DARLEY HEATH
	HEL SEM	HELICTOTRICHON SEMPERVIRENS	BLUE OAT GRASS
	LIR BIG	LIRIOPE MUSCARI 'BIG BLUE'	BIG BLUE LILYTURF
	LOR LDO	LOROPETALUM CHINENSE RUBRUM 'KURENAI'	JAZZ HANDS® PINK FRINGE FLOWER
	MAH AQU	MAHONIA AQUIFOLIUM	OREGON GRAPE
M	MUH RIG	MUHLENBERGIA RIGENS	DEER GRASS
	NEP RAC	NEPETA RACEMOSA 'WALKER'S LOW'	WALKER'S LOW CATMINT
	PEN HAM	PENNISETUM ALOPECUROIDES 'HAMELN'	HAMELN FOUNTAIN GRASS
	PEN KRS	PENNISETUM ORIENTALE `KARLEY ROSE`	KARLEY ROSE FOUNTAIN GRASS
	PER LIT	PEROVSKIA ATRIPLICIFOLIA `LITTLE SPIRE`	LITTLE SPIRE RUSSIAN SAGE
RHA	RHA EVE	RHAMNUS CALIFORNICA 'EVE CASE'	EVE CASE COFFEEBERRY
	RHA BAL	RHAPHIOLEPIS INDICA 'BALLERINA'	BALLERINA INDIAN HAWTHORN
	SAL PUR	SALIX PURPUREA 'NANA'	DWARF PURPLE OSIER WILLOW
	SAR RUS	SARCOCOCCA RUSCIFOLIA	FRAGRANT SWEETBOX
	SED AUF	SEDUM X `AUTUMN FIRE`	AUTUMN FIRE SEDUM
	SPI DOU	SPIRAEA DOUGLASII	WESTERN SPIREA
	SYM ALB	SYMPHORICARPOS ALBUS	COMMON WHITE SNOWBERRY
	TEU COM	TEUCRIUM FRUTICANS `COMPACTUM`	COMPACT BUSH GERMANDER

TERRAIN
LANDSCAPE ARCHITECTURE
310 Oak Street, Suite 3
Ashland, Oregon 97520
541.500.4776
TERRAINARCH.COM

CALDERA OAKS SUBDIVISION
300 CLAY STREET
ASHLAND, OR 97520

REGISTERED LANDSCAPE ARCHITECT
REG. # 0596
Piper von Chamier
OREGON
03/11/2004

REVISIONS

#	DATE	DESCRIPTION
-		
-		
-		
-		
-		

PERMIT SET

LANDSCAPE PLANTING PLAN

L4.2

PROJECT NO. 2516
07.03.2025
TEAM: SB, EG

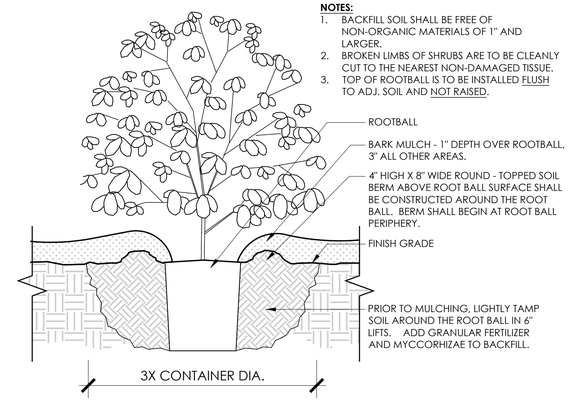

NOTES:
1. BACKFILL SOIL SHALL BE FREE OF NON-ORGANIC MATERIALS OF 1" AND LARGER.
2. BROKEN LIMBS OF SHRUBS ARE TO BE CLEANLY CUT TO THE NEAREST NON-DAMAGED TISSUE.
3. TOP OF ROOTBALL IS TO BE INSTALLED FLUSH TO ADJ. SOIL AND NOT RAISED.

3 SECTION: SHRUB & GROUNDCOVER PLANTING
Scale: NTS

I4.3 planting details.dwg

PLANT SPACING MULTIPLICATION TABLE	
SPACING	X FACTOR
12" O.C.	1.156 (X AREA)
18" O.C.	0.513
24" O.C.	0.288
30" O.C.	0.184
36" O.C.	0.128
48" O.C.	0.072

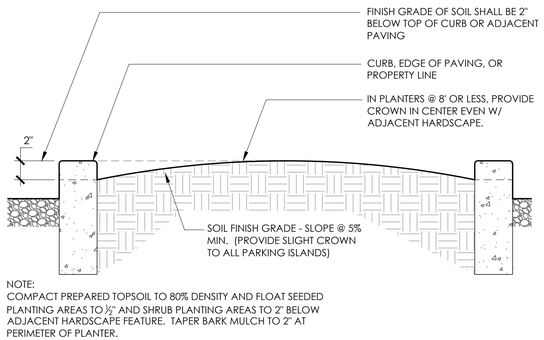

NOTE:
COMPACT PREPARED TOPSOIL TO 80% DENSITY AND FLOAT SEEDED PLANTING AREAS TO ½" AND SHRUB PLANTING AREAS TO 2" BELOW ADJACENT HARDSCAPE FEATURE. TAPER BARK MULCH TO 2" AT PERIMETER OF PLANTER.

5 SECTION: SOIL PROFILE IN ISOLATED PLANTERS
Scale: 1" = 1'-0"

I4.3 planting details.dwg

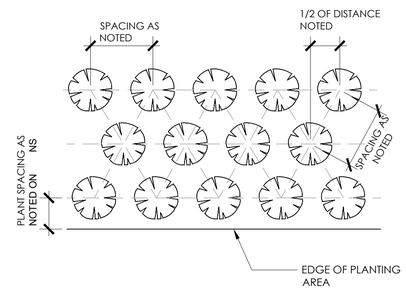

2 PLAN: SHRUB & GROUNDCOVER PLANTING LAYOUT
Scale: NTS

I4.3 planting details.dwg

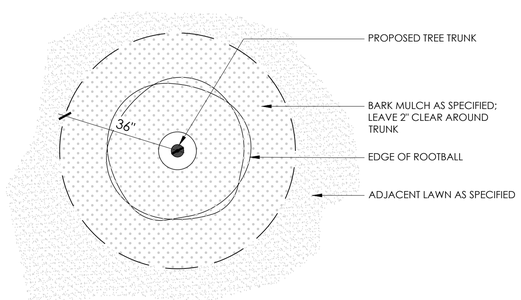

4 PLAN: MULCH RING AT LAWN TREE
Scale: NTS

I4.3 planting details.dwg

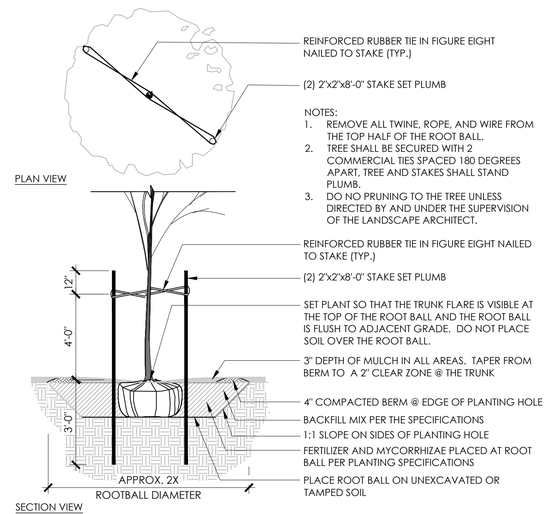

NOTES:
1. REMOVE ALL TWINE, ROPE, AND WIRE FROM THE TOP HALF OF THE ROOT BALL.
2. TREE SHALL BE SECURED WITH 2 COMMERCIAL TIES SPACED 180 DEGREES APART, TREE AND STAKES SHALL STAND PLUMB.
3. DO NO PRUNING TO THE TREE UNLESS DIRECTED BY AND UNDER THE SUPERVISION OF THE LANDSCAPE ARCHITECT.

1 DETAIL: TREE PLANTING & STAKING
Scale: 1/2" = 1'-0"

I4.3 planting details.dwg

TERRAIN
LANDSCAPE ARCHITECTURE
310 Oak Street, Suite 3
Ashland, Oregon 97520

541.500.4776
TERRAINARCH.COM

CALDERA OAKS SUBDIVISION
300 CLAY STREET
ASHLAND, OR 97520

REGISTERED LANDSCAPE ARCHITECT
REG. # 0596
Piper von Chamier
OREGON
03/11/2004

REVISIONS

#	DATE	DESCRIPTION
-		
-		
-		
-		
-		

PERMIT SET

PLANTING DETAILS

L4.3

PROJECT NO. 2516
07.03.2025
TEAM: SB, EG

CRITICAL ANALYSIS

Generated:	2025-06-26 15:02
P.O.C. NUMBER: 01	
Water Source Information:	
FLOW AVAILABLE	
Water Meter Size:	1"
Flow Available	19.62 GPM
PRESSURE AVAILABLE	
Static Pressure at POC:	140 PSI
Elevation Change:	5.00 ft
Service Line Size:	1"
Length of Service Line:	20 ft
Pressure Available:	136 PSI
DESIGN ANALYSIS	
Maximum Station Flow:	19.25 GPM
Flow Available at POC:	19.62 GPM
Residual Flow Available:	0.37 GPM
Critical Station:	32
Design Pressure:	40 PSI
Friction Loss:	2.66 PSI
Fittings Loss:	0.27 PSI
Elevation Loss:	0 PSI
Loss through Valve:	11 PSI
Pressure Req. at Critical Station:	53.9 PSI
Loss for Fittings:	0.37 PSI
Loss for Main Line:	3.66 PSI
Loss for POC to Valve Elevation:	0 PSI
Loss for Backflow:	0 PSI
Loss for Water Meter:	2.05 PSI
Critical Station Pressure at POC:	60.0 PSI
Pressure Available:	136 PSI
Residual Pressure Available:	76.0 PSI

VALVE SCHEDULE

NUMBER	MODEL	SIZE	TYPE	GPM	WIRE	PSI	PSI @ POC	PRECIP
1	HUNTER ICZ-101-40-LF	1"	AREA FOR DRIPLINE	11.12	34.3	52.2	55.8	0.85 in/h
2	HUNTER ICV-G	1"	SHRUB ROTARY	7.01	22.9	42.9	44.5	0.35 in/h
3	HUNTER ICV-G	1"	TURF ROTARY	11.06	22.9	34.2	37.6	0.89 in/h
4	HUNTER ICZ-101-40-LF	1"	AREA FOR DRIPLINE	11.67	29.7	50.7	54.5	0.83 in/h
6	HUNTER ICZ-101-40-LF	1"	AREA FOR DRIPLINE	10.64	107.3	52.2	55.1	0.64 in/h
7	HUNTER ICV-G	1"	TURF ROTARY	12.92	97.0	44.5	48.5	0.57 in/h
8	HUNTER ICV-G	1"	BUBBLER	6.5	112.6	33.1	34.3	0.94 in/h
10	HUNTER ICZ-101-40-LF	1"	AREA FOR DRIPLINE	10.58	188.9	49.2	51.7	0.95 in/h
11	HUNTER ICV-G	1"	TURF ROTARY	7.45	207.0	43.1	44.4	0.52 in/h
12	HUNTER ICV-G	1"	TURF ROTARY	11.04	212.8	33.9	36.5	0.85 in/h
13	HUNTER ICZ-101-40-LF	1"	AREA FOR DRIPLINE	11.7	288.2	50.2	52.7	1.02 in/h
14	HUNTER ICV-G	1-1/2"	TURF ROTARY	13.09	294.1	42.2	45.3	0.4 in/h
15	HUNTER ICV-G	1-1/2"	TURF ROTARY	13.58	406.8	32.2	34.7	0.36 in/h
16	HUNTER ICV-G	1"	TURF ROTARY	7.04	752.9	43.0	43.6	0.69 in/h
17	HUNTER ICV-G	1"	BUBBLER	4	746.2	32.5	32.8	0.98 in/h
18	HUNTER ICZ-101-40-LF	1"	AREA FOR DRIPLINE	4.19	740.3	44.8	45.1	0.83 in/h
19	HUNTER ICV-G	1"	BUBBLER	4	542.8	32.8	33.1	0.95 in/h
20	HUNTER ICZ-101-40-LF	1"	AREA FOR DRIPLINE	12.2	548.3	51.9	53.4	0.69 in/h
21	HUNTER ICV-G	1"	SHRUB ROTARY	5.01	636.3	42.8	43.0	0.51 in/h
22	HUNTER ICV-G	1-1/2"	TURF ROTARY	14.94	626.3	42.4	43.8	0.59 in/h
23	HUNTER ICV-G	1"	TURF ROTARY	4.84	616.2	42.6	42.8	0.63 in/h
24	HUNTER ICV-G	1"	TURF ROTARY	5.72	756.7	43.0	43.4	0.67 in/h
25	HUNTER ICV-G	1-1/2"	TURF ROTARY	8.69	782.7	42.0	43.0	0.55 in/h
26	HUNTER ICV-G	1"	BUBBLER	6.5	891.9	33.2	34.0	0.92 in/h
27	HUNTER ICZ-101-40-LF	1"	AREA FOR DRIPLINE	15.26	897.5	52.0	55.2	0.68 in/h
28	HUNTER ICV-G	1"	BUBBLER	8	867.2	34.0	35.0	0.92 in/h
29	HUNTER ICZ-101-40-LF	1"	AREA FOR DRIPLINE	16.81	872.9	52.6	56.3	0.7 in/h
30	HUNTER ICZ-101-40-LF	1"	AREA FOR DRIPLINE	6.56	1,047	47.1	48.1	0.62 in/h
31	HUNTER ICZ-101-40-LF	1"	AREA FOR DRIPLINE	5.82	1,023	46.3	47.1	0.62 in/h
32	HUNTER ICZ-101-40-LF	1"	AREA FOR DRIPLINE	19.25	811.1	53.9	60	0.66 in/h
33	HUNTER ICV-G	1"	BUBBLER	5.5	817.4	32.8	33.5	0.95 in/h
	Common Wire				1,712			

IRRIGATION NOTES

1. THE CITY OF ASHLAND TO REVIEW AND APPROVE ALL LANDSCAPE RELATED ITEMS PRIOR TO BEGINNING LANDSCAPE INSTALLATION
2. REVIEW SPECIFICATION SECTION 328423 FOR ALL ASPECTS OF THE IRRIGATION SYSTEM INSTALLATION.
3. MAINTAIN AT JOB SITE ONE (1) COPY OF DRAWINGS, SPECIFICATIONS, ADDENDA, AND APPROVED SHOP DRAWINGS, CHANGE ORDERS,AND OTHER PROJECT DOCUMENTS.
4. RECORD ACTUAL LOCATION OF ALL CONCEALED COMPONENTS, PIPING SYSTEM, CONDUIT AND SLEEVE LOCATIONS. KEEP THIS DOCUMENT CURRENT. DO NOT PERMANENTLY CONCEAL ANY WORK UNTIL REQUIRED INFORMATION HAS BEEN RECORDED. FURNISH TWO (2) COPIES OF RECORD DRAWINGS TO THE OWNER. REDUCE ONE COPY OF RECORD DRAWING TO FIT INSIDE CONTROLLER LID. LAMINATE REDUCED COPY.
5. ALL WORK SHALL BE INSTALLED BY COMPETENT WORKMEN EXPERIENCED IN TRADE IN A NEAT AND ORDERLY MANNER ACCEPTABLE TO THE OWNER'S REPRESENTATIVE.
6. CONFORM TO ALL PERTINENT CODES AND REGULATIONS. COMPLY WITH THE LATEST RULES OF THE NATIONAL ELECTRICAL CODE AND THE AMERICAN MASTER PLUMBERS CODE.
7. VERIFY THAT FIELD CONDITIONS ARE AS INDICATED ON DRAWINGS. NOTIFY THE OWNER'S REPRESENTATIVE IF DISCREPENCIES ARE OBSERVED.
8. NOTIFY OWNER'S REPRESENTATIVE 48 HOURS IN ADVANCE OF ALL SITE OBSERVATION VISITS REQUIRED BY THE OWNER'S REPRESENTATIVE. THE CONTRACTOR SHALL BE PRESENT AT EACH SITE OBSERVATION VISIT. REQUIRED VISITS INCLUDE: PRESSURE TEST AFTER MAINLINE LAID, AFTER NON-PRESSURIZED LINES PRIOR TO BACKFILL, AND FINAL OPERATION OF ALL IRRIGATION STATIONS INCLUDING HEAD TO HEAD COVERAGE.
9. IRRIGATION PIPE, HEADS, VALVES, CONTROLLER, AND BACKFLOW DEVICE AS NOTED ON LEGEND.
10. VERIFY LOCATION OF EXISTING UTILITIES PRIOR TO BEGINNING WORK.
11. PIPING LAYOUT IS DIAGRAMMATIC ONLY. ROUTE PIPING IN PLANTERS AND AVOID UTILITIES AND STRUCTURES. LAYOUT SHALL FOLLOW AS CLOSELY AS PRACTICAL THE SCHEMATIC DESIGN ON THE DRAWINGS. MAKE NO SUBSTANTIAL CHANGES WITHOUT PRIOR APPROVAL FROM THE OWNER'S REPRESENTATIVE.
12. ALL LATERAL PIPE SHALL BE 1" IN SIZE UNLESS OTHERWISE INDICATED ON THE PLAN.
13. COORDINATE ALL IRRIGATION EQUIPMENT LOCATIONS WITH OTHER CONTRACTORS. NOTIFY THE OWNER'S REPRESENTATIVE IF CONFLICTS ARE ENCOUNTERED.
14. ALL SPRINKLER HEADS ALONG SIDEWALKS SHALL BE TWO INCHES FROM SIDEWALKS.
15. PIPE DEPTH - LATERAL LINES - 12 INCH MINIMUM; MAINLINE - 18 INCH MINIMUM.
16. BOTTOM OF TRENCHES AND BACKFILL MATERIAL SHALL BE FREE OF ROCKS, CLODS, AND OTHER SHARP OBJECTS. SNAKE PIPE FROM SIDE TO SIDE AT TRENCH BOTTOM TO ALLOW EXPANSION.
17. DO NOT INSTALL HEADS UNTIL LINES HAVE BEEN THOROUGHLY FLUSHED AND PRESSURE TESTED.
18. SHUT OFF VALVES ARE REQUIRED AT EACH POINT OF CONNECTION, VALVE BOX, AND AT EVERY LOCATION WHERE THE MAINLINE PASSES UNDER 20 FEET OF PAVEMENT.
19. A MANUAL DRAIN MUST BE INSTALLED AT THE LOW SPOT OF EACH ZONE.THE DRAIN SHOULD BE A BRASS MANUAL ANGLE VALVE WITH "T" STEM. DRAINS LOCATED ON LATERAL LINES SHALL BE 1" SIZE.
20. COORDINATE WIRE AND CONDUIT LOCATIONS BETWEEN ELECTRIC CONTROL VALVES AND THE ELECTRIC CONTROLLER.
21. UPON COMPLETION OF ALL SYSTEMS, THE CONTRACTOR SHALL PERFORM A COVERAGE TEST TO DETERMINE THAT WATER IS BEING APPLIED CORRECTLY AND ADEQUATELY TO ALL PLANTINGS. CHANGE ANY HEADS, NOZZLES, OR ORIFICES AS MAY BE REQUIRED TO PROVIDE COVERAGE AS INDICATED ON THE DRAWINGS. PROMPTLY ADJUST HEADS TO KEEP WATER OFF BUILDINGS AND STRUCTURES WITH MINIMAL SPRAY ON PAVED SURFACES.
22. ALL SPRAY HEADS ADJACENT TO HARDSCAPE TO BE ON 6" POP-UPS. ALL OTHER SPRAY HEADS TO BE ON 12" POP-UPS.
23. ORIENT HEADS TO SPRAY AWAY FROM BUILDINGS AND STRUCTURES WHEREVER POSSIBLE.
24. CONTRACTOR TO VERIFY PRESSURE ON SITE BEFORE BEGINNING ANY IRRIGATION WORK.
25. ALL THREADED JOINTS SHALL BE COATED WITH TEFLON TAPE.
26. SEE SPECIFICATIONS FOR THE REQUIRED PRESSURE TESTS OF THE IRRIGATION SYSTEM.
27. THE PROVIDED IRRIGATION PLAN IS DIAGRAMMATIC. LOCATE ALL IRRIGATION LINES WITHIN THE PROPERTY LINE BOUNDARIES AND WITHIN LANDSCAPE AREAS.

SLEEVING:

28. IRRIGATION LINES UNDER PAVING SHALL BE PLACED IN A SLEEVE THAT IS AT LEAST 2 SIZES LARGER THAN PASSING PIPE.
29. SLEEVE LOCATIONS ARE DIAGRAMMATIC. CONTRACTOR SHALL VERIFY SLEEVE LOCATIONS AND COORDINATE WITH THE OWNER'S REPRESENTATIVE.
30. CONTRACTOR SHALL VERIFY SLEEVING LOCATIONS AND COORDINATE WITH THE OWNER'S REPRESENTATIVE. SLEEVES ARE TO BE PROVIDED BY GENERAL CONTRACTOR.
31. CAP ALL UNUSED SLEEVES.
32. COORDINATE THE INSTALLATION OF ELECTRICAL SERVICE AND CONDUIT TO THE LOCATION OF THE PROPOSED IRRIGATION CONTROLLER.

IRRIGATION SCHEDULE

SYMBOL	MANUFACTURER/MODEL/DESCRIPTION	QTY	PSI
LST SST RST	HUNTER MP STRIP PROS-06-PRS40-CV TURF ROTATOR, 6IN. POP-UP WITH FACTORY INSTALLED CHECK VALVE, PRESSURE REGULATED TO 40 PSI, MP ROTATOR NOZZLE ON PRS40 BODY. LCS=IVORY LEFT STRIP, SS=BROWN SIDE STRIP, RCS=COPPER RIGHT STRIP.	50	40
1000	HUNTER MP1000 PROS-06-PRS30-CV (2) TURF ROTATOR, 6IN. POP-UP WITH CHECK VALVE, PRESSURE REGULATED TO 30 PSI, MP ROTATOR NOZZLE ON PRS30 BODY. M=MAROON ADJ ARC 90 TO 210, L=LIGHT BLUE 210 TO 270 ARC, O=OLIVE 360 ARC.	117	30
1000	HUNTER MP1000 PROS-06-PRS40-CV TURF ROTATOR, 6IN. POP-UP WITH CHECK VALVE, PRESSURE REGULATED TO 40 PSI, MP ROTATOR NOZZLE ON PRS40 BODY. M=MAROON ADJ ARC 90 TO 210, L=LIGHT BLUE 210 TO 270 ARC, O=OLIVE 360 ARC.	58	40
2000	HUNTER MP2000 PROS-06-PRS30-CV (2) TURF ROTATOR, 6IN. POP-UP WITH FACTORY INSTALLED CHECK VALVE, PRESSURE REGULATED TO 30 PSI, MP ROTATOR NOZZLE ON PRS30 BODY. K=BLACK ADJ ARC 90-210, G=GREEN ADJ ARC 210-270, R=RED 360 ARC.	4	30
2000	HUNTER MP2000 PROS-06-PRS40-CV TURF ROTATOR, 6IN. POP-UP WITH FACTORY INSTALLED CHECK VALVE, PRESSURE REGULATED TO 40 PSI, MP ROTATOR NOZZLE ON PRS40 BODY. K=BLACK ADJ ARC 90-210, G=GREEN ADJ ARC 210-270, R=RED 360 ARC.	14	40
3000	HUNTER MP3000 PROS-06-PRS30-CV (2) TURF ROTATOR, 6IN. POP-UP WITH FACTORY INSTALLED CHECK VALVE, PRESSURE REGULATED TO 30 PSI, MP ROTATOR NOZZLE ON PRS30 BODY. B=BLUE ADJ ARC 90-210, Y=YELLOW ADJ ARC 210-270, A=GRAY 360 ARC.	19	30
1000	HUNTER MP1000 PROS-12-PRS40-CV SHRUB ROTATOR, 12IN. POP-UP WITH CHECK VALVE, PRESSURE REGULATED TO 40 PSI, MP ROTATOR NOZZLE. M=MAROON ADJ ARC 90 TO 210, L=LIGHT BLUE 210 TO 270 ARC, O=OLIVE 360 ARC ON PRS40 BODY.	29	40
0.25 0.50	HUNTER RZWS-SLEEVE-18-CV 18IN. LONG RZWS WITH FILTER FABRIC SLEEVE, .25 GPM OR .50 GPM BUBBLER OPTIONS, CHECK VALVE, 1/2IN. SWING JOINT FOR CONNECTION TO 1/2IN. PIPE	138	30

SYMBOL	MANUFACTURER/MODEL/DESCRIPTION	QTY
	HUNTER ICZ-101-40-LF 1" DRIP CONTROL ZONE KIT. 1IN. ICV GLOBE VALVE WITH 1IN. HY100 FILTER SYSTEM. PRESSURE REGULATION: 40 PSI. FLOW RANGE: .5 GPM - 15 GPM. 150 MESH STAINLESS STEEL SCREEN.	12
	PIPE TRANSITION POINT IN DRIP BOX PIPE TRANSITION POINT FROM PVC LATERAL TO DRIP TUBING WITH RISER IN 6IN. DRIP BOX.	91
	AREA TO RECEIVE DRIPLINE HUNTER HDL-06-18-CV HDL-06-18-CV: HUNTER DRIPLINE W/ 0.6 GPH EMITTERS AT 18" O.C. CHECK VALVE, DARK BROWN TUBING WITH GRAY STRIPING. DRIPLINE LATERALS SPACED AT 18" APART, WITH EMITTERS OFFSET FOR TRIANGULAR PATTERN. INSTALL WITH HUNTER PLD BARBED OR PLD-LOC FITTINGS.	20,598 LF

SYMBOL	MANUFACTURER/MODEL/DESCRIPTION	QTY
	HUNTER ICV-G 1-1/2" 1IN., 1-1/2IN., 2IN., AND 3IN. PLASTIC ELECTRIC REMOTE CONTROL VALVES, GLOBE CONFIGURATION, WITH NPT THREADED INLET/OUTLET, FOR COMMERCIAL/MUNICIPAL USE.	4
	HUNTER ICV-G 1" 1IN., 1-1/2IN., 2IN., AND 3IN. PLASTIC ELECTRIC REMOTE CONTROL VALVES, GLOBE CONFIGURATION, WITH NPT THREADED INLET/OUTLET, FOR COMMERCIAL/MUNICIPAL USE.	15
	HUNTER HQ-44LRC 1" QUICK COUPLER VALVE, YELLOW RUBBER LOCKING COVER, RED BRASS AND STAINLESS STEEL, WITH 1IN. NPT INLET, 2-PIECE BODY.	5
	LANDSCAPE PRODUCTS INC. BBV 1/2IN., 3/4IN., 1IN., 1-1/4IN., 1-1/2IN., 2IN., 2-1/2IN., 3IN. FULL PORT BRASS BALL VALVE. SUITABLE FOR A FULL RANGE OF LIQUIDS AND GASES IN RESIDENTIAL AND COMMERCIAL APPLICATIONS.	4
M	HUNTER ICV-G 1-1/2" 1IN., 1-1/2IN., 2IN., AND 3IN. PLASTIC ELECTRIC MASTER VALVE, GLOBE CONFIGURATION, WITH NPT THREADED INLET/OUTLET, FOR COMMERCIAL/MUNICIPAL USE.	1
BF	ZURN 350XL 1" DOUBLE CHECK VALVE ASSEMBLY W/ EZSWAP INSERT.	1
C	HUNTER A2C-75D-M 75-STATION DECODER CONTROLLER IN AN OUTDOOR GRAY METAL WALL MOUNT ENCLOSURE.	1
FS	HUNTER HFS-158 FLOW SENSOR FOR USE WITH ACC CONTROLLER, 1-1/2IN. SCHEDULE 80 SENSOR BODY, 24 VAC, 2 AMP.	1
M	WATER METER 1"	1
	IRRIGATION LATERAL LINE: PVC SCHEDULE 40 1"	9,694 LF
	IRRIGATION LATERAL LINE: PVC SCHEDULE 40 1 1/2"	65.3 LF
	IRRIGATION MAINLINE: PVC SCHEDULE 40 1 1/2"	1,712 LF
	PIPE SLEEVE: PVC CLASS 200 TYPICAL PIPE SLEEVE FOR IRRIGATION PIPE. PIPE SLEEVE SIZE SHALL ALLOW FOR IRRIGATION PIPING AND THEIR RELATED COUPLINGS TO EASILY SLIDE THROUGH SLEEVING MATERIAL. EXTEND SLEEVES 18 INCHES BEYOND EDGES OF PAVING OR CONSTRUCTION.	425.9 LF

Valve Callout

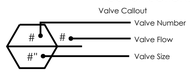

TERRAIN
LANDSCAPE ARCHITECTURE
310 Oak Street, Suite 3
Ashland, Oregon 97520
541.500.4776
TERRAINARCH.COM

CALDERA OAKS SUBDIVISION
300 CLAY STREET
ASHLAND, OR 97520

REGISTERED LANDSCAPE ARCHITECT
REG. # 0596
Piper von Chamier
OREGON
03/11/2004

REVISIONS

#	DATE	DESCRIPTION
-		
-		
-		
-		
-		

PERMIT SET

IRRIGATION NOTES + LEGENDS

L5.0

PROJECT NO. 2516
07.03.2025
TEAM: SB, EG

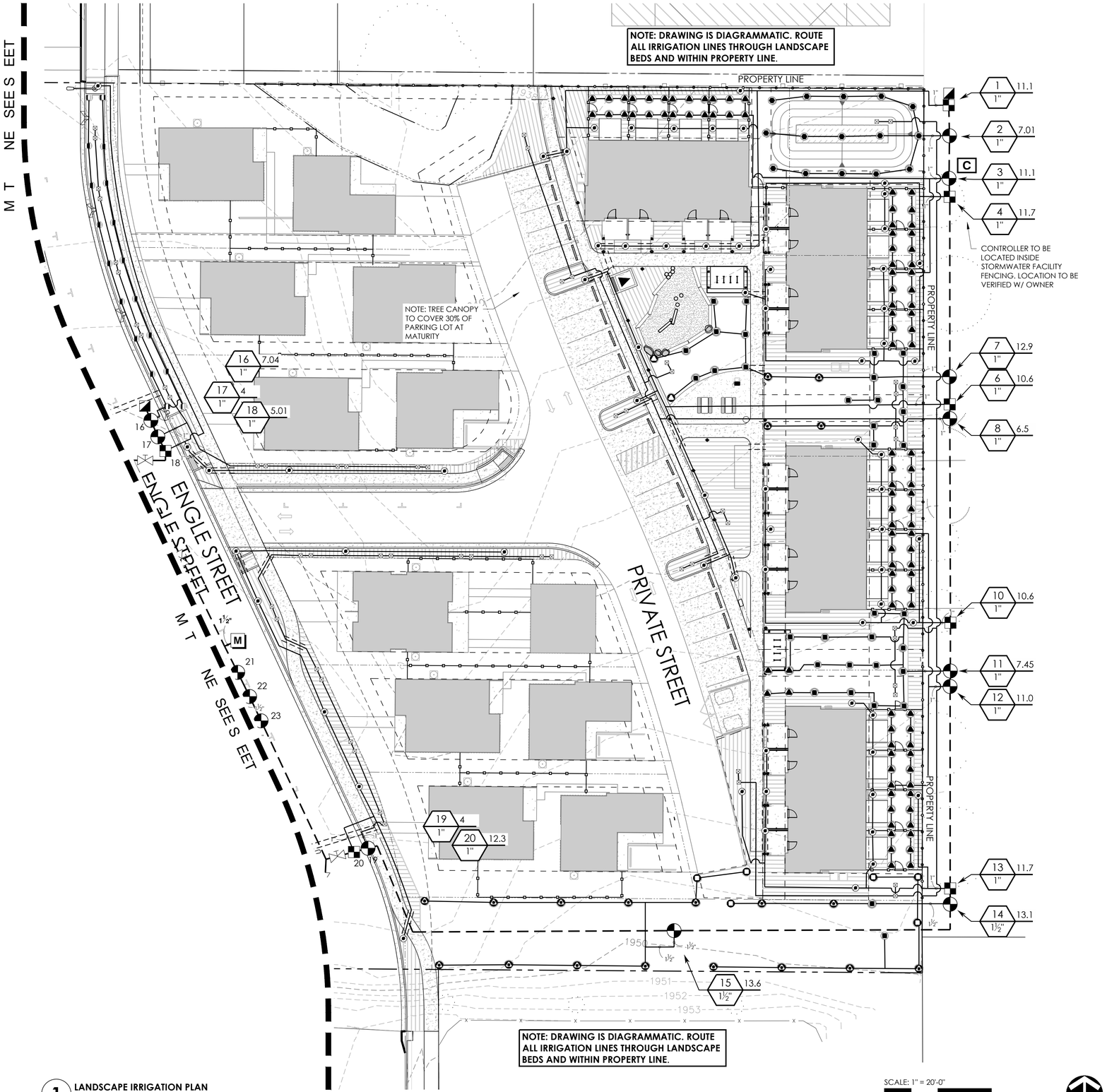

1 **LANDSCAPE IRRIGATION PLAN**
Scale: 1" = 20'-0" (34x22 SHEET SIZE)

IRRIGATION SCHEDULE

SYMBOL	MANUFACTURER/MODEL
LST SST RST	HUNTER MP STRIP PROS-06-PRS40-CV
1000	HUNTER MP1000 PROS-06-PRS30-CV (2)
1000	HUNTER MP1000 PROS-06-PRS40-CV
2000	HUNTER MP2000 PROS-06-PRS30-CV (2)
2000	HUNTER MP2000 PROS-06-PRS40-CV
3000	HUNTER MP3000 PROS-06-PRS30-CV (2)
3000	HUNTER MP3000 PROS-06-PRS40-CV
1000	HUNTER MP1000 PROS-12-PRS40-CV
0.25 0.50	HUNTER RZWS-SLEEVE-18-CV

SYMBOL	MANUFACTURER/MODEL
	HUNTER ICZ-101-40-LF
	PIPE TRANSITION POINT IN DRIP BOX
	AREA TO RECEIVE DRIPLINE HUNTER HDL-06-18-CV

SYMBOL	MANUFACTURER/MODEL
	HUNTER ICV-G
	HUNTER HQ-44LRC
	LANDSCAPE PRODUCTS INC. BBV
M	HUNTER ICV-G 1-1/2"
BF	ZURN 350XL 1"
C	HUNTER A2C-75D-M
FS	HUNTER HFS-158
	IRRIGATION LATERAL LINE: PVC SCHEDULE 40
	IRRIGATION MAINLINE: PVC SCHEDULE 40
	PIPE SLEEVE: PVC CLASS 200

Valve Callout
Valve Number
Valve Flow
Valve Size

TERRAIN
LANDSCAPE ARCHITECTURE
310 Oak Street, Suite 3
Ashland, Oregon 97520
541.500.4776
TERRAINARCH.COM

CALDERA OAKS SUBDIVISION
300 CLAY STREET
ASHLAND, OR 97520

REGISTERED LANDSCAPE ARCHITECT
REG. # 0596
Piper von Chamier
OREGON
03/11/2004

REVISIONS

#	DATE	DESCRIPTION
-		
-		
-		
-		
-		

PERMIT SET

LANDSCAPE IRRIGATION PLAN

L5.2

PROJECT NO. 2516
07.03.2025
TEAM: SB, EG

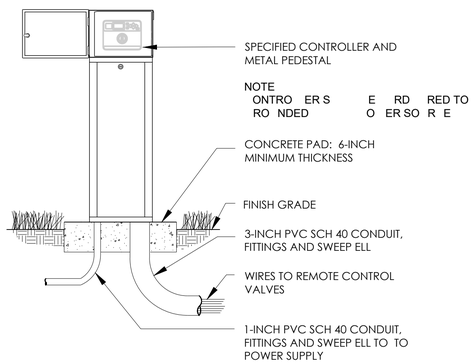

12 PEDESTAL MOUNT CONTROLLER

1/2" = 1'-0" P-MF-2516-25

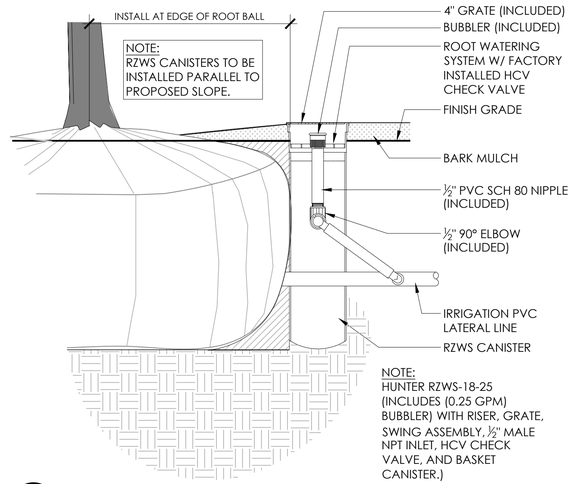

9 SECTION: RZWS WATERING SYSTEM

3" = 1'-0" P-MF-2516-23

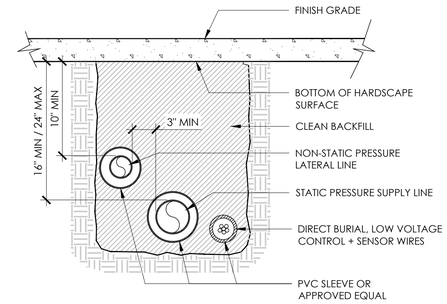

NOTES

1. THE INDICATED MIN. LINE DEPTHS APPLY TO BOTH TRENCH AND SLEEVE APPLICATIONS.
2. COORDINATE INSTALLATION OF PIPING AND WIRES UNDER VEHICULAR PAVEMENT AREAS WITH OTHER TRADES.
3. ALL SLEEVES TO BE 4" SCH 40 PVC UNLESS OTHERWISE APPROVED.
4. ALL SLEEVES TO RUN 12" (MIN.) PAST EDGE OF HARDSCAPE. TAPE ENDS OF SLEEVES UPON INSTALLATION AND STAKE ENDS IF BACKFILLING OCCURS PRIOR TO IRRIGATION WORK.

6 DETAIL: IRRIGATION SLEEVING @ PAVEMENT

3/8" = 1'-0" P-MF-2516-15

LEGEND

1. DRIP REMOTE CONTROL VALVE (SEE PLAN) WITH FILTER REGULATOR
2. IRRIGATION VALVE BOX
3. WATERPROOF CONNECTORS (2)
4. 18"-24" COILED WIRE TO CONTROLLER
5. FINISH GRADE AT ADJACENT SURFACE (TURF OR MULCH)
6. SCH. 80 CLOSE NIPPLE, MATCH SIZE TO VALVE
7. ISOLATION VALVE, SIZE AND TYPE PER PLAN
8. PVC SLIP X MPT ADAPTOR
9. BRICK SUPPORTS (4)
10. FILTER FABRIC - WRAP TWICE AROUND BRICK SUPPORTS
11. 3/4" WASHED GRAVEL - 4" MIN. DEPTH
12. IRRIGATION LATERAL LINE
13. IRRIGATION MAIN LINE W/ TEE TO VALVE

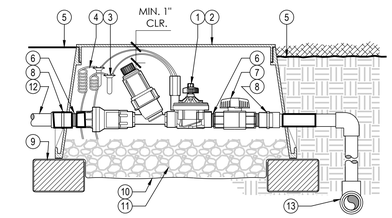

3 DETAIL: DRIP CONTROL VALVE

1 1/2" = 1'-0" P-MF-2516-18

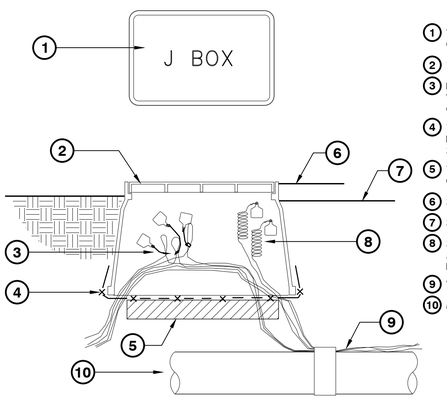

1. VALVE BOX LID, HEAD BRAND "J BOX" ON LID WITH 2" HIGH LETTERS
2. 10" X 15" BOX
3. LOOP, BUNDLE, AND LABEL SPARE WIRES THAT ARE TO CONTINUE, AS OCCURS
4. 1/2" WIRE CLOTH GOPHER PROTECTION SCREEN, WRAP 6" UP SIDES
5. TWO 6" X 2' X 16" CONCRETE BLOCK CPAS, ONE ON EACH SIDE OF BOX
6. SET BOX FLUSH TO GRADE AT LAWN
7. SET BOX 2" ABOVE GRADE AT SHRUBS
8. SPARE WIRES THAT ARE TO TERMINATE AT THIS BOX: COIL 30" LENGTH AND I.D. TAG
9. WIRES TO CONTROLLER
10. MAINLINE AS OCCURS

11 WIRE BUNDLE JUNCTION BOX

1 1/2" = 1'-0" P-MF-2516-37

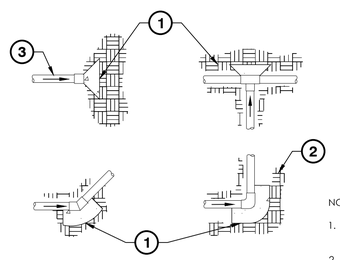

1. BEARING SURFACE
2. EXISTING OR MODIFIED SOIL (SEE SPECIFICATION FOR SOIL MODIFICATION)
3. FLOW DIRECTION

NOTES:

1. SIZE THRUST BLOCKS SHALL BE SPECIFIED AS SHOW IN THE TABLE.
2. CONTROL WIRES SHALL NOT BE ENCASED IN CONCRETE.
3. ALL FITTINGS SHALL BE WRAPPED WITH POLYETHYLENE TO PREVENT CONCRETE FROM ADHERING TO PIPE, FITTINGS OR BOLTS.
4. JOINTS AND BOLTS SHALL BE ACCESSIBLE FOR REPAIRS.
5. THRUST BLOCKS SHALL BE A MINIMUM OF 6" THICK.
6. ONE 80 LBS. SACK OF CONCRETE SHALL COVER .6 FT.^{3}

PIPE SIZE	TEE AND PLUG	90° BEND	45° BEND
1-1/2"	0.45 FEET ^{3}	0.63 FEET ^{3}	0.34 FEET ^{3}
2"	0.69 FEET ^{3}	0.97 FEET ^{3}	0.53 FEET ^{3}
2-1/2"	1.0 FEET ^{3}	1.41 FEET ^{3}	0.77 FEET ^{3}
3"	1.48 FEET ^{3}	2.10 FEET ^{3}	1.14 FEET ^{3}
4"	2.43 FEET ^{3}	3.45 FEET ^{3}	1.87 FEET ^{3}
6"	5.25 FEET ^{3}	7.41 FEET ^{3}	4.02 FEET ^{3}
8"	9.08 FEET ^{3}	12.83 FEET ^{3}	6.96 FEET ^{3}
10"	14.93 FEET ^{3}	21.07 FEET ^{3}	11.44 FEET ^{3}

8 THRUST BLOCK

1:10 P-MF-2516-30

NOTE:
TAPE WIRES PER SPEC. DO NOT TAPE BUNDLED WIRES TO THE MAINLINE.

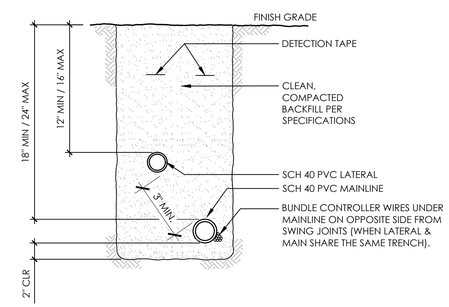

5 DETAIL: COMMON TRENCH

1 1/2" = 1'-0" P-MF-2516-07

NOTES:

1. INSTALL (1) ONE VALVE PER BOX.
2. PLACE CHRISTY'S I.D. TAG WITH STATION NUMBER ON VALVES.
3. SET VALVE BOXES PARALLEL AND LEVEL TO EACH OTHER (WHEN FEASIBLE) & PERPENDICULAR TO HARDSCAPE EDGES.
4. SET TOP OF VALVE FLUSH.

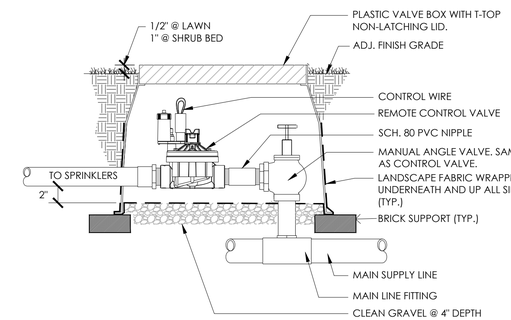

2 DETAIL: REMOTE CONTROL VALVE

1/4" = 1'-0" P-MF-2516-06

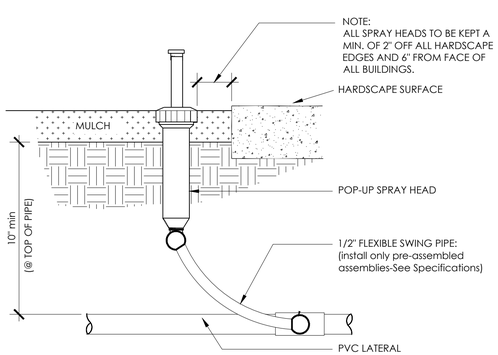

10 SECTION: POP UP SPRAY HEAD

3/8" = 1'-0" P-MF-2516-24

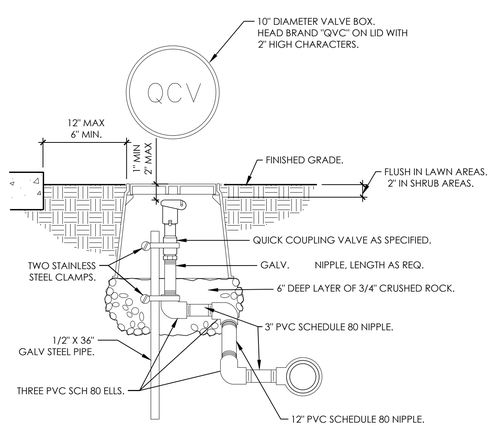

7 QUICK COUPLING VALVE IN BOX

1 1/2" = 1'-0" P-MF-2516-29

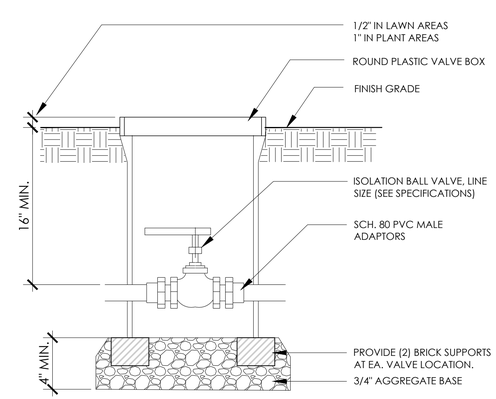

4 DETAIL: IRRIGATION BALL ISOLATION VALVE

1/2" = 1'-0" P-MF-2516-17

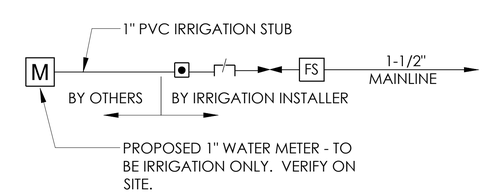

POINT OF CONNECTION TO METER

- 1-1/2" PRESSURE REGULATOR VALVE
- 1" DOUBLE CHECK VALVE ZURN 350XL
- 1-1/2" ISOLATION BALL VALVE
- FS 1-1/2" HUNTER FLOW-SYNC, SEE DETAIL X/LX.X

1" IRRIGATION P.O.C. STUB INTO LANDSCAPING BY OTHERS

1 IRRIGATION POINT OF CONNECTION

N.T.S. P-MF-2516-26

TERRAIN
LANDSCAPE ARCHITECTURE
310 Oak Street, Suite 3
Ashland, Oregon 97520
541.500.4776
TERRAINARCH.COM

CALDERA OAKS SUBDIVISION
300 CLAY STREET
ASHLAND, OR 97520

REGISTERED LANDSCAPE ARCHITECT
REG. # 0596
Piper von Chamier
OREGON
03/11/2004

REVISIONS

#	DATE	DESCRIPTION
-		
-		
-		
-		
-		

PERMIT SET

IRRIGATION DETAILS

L5.3

PROJECT NO. 2516
07.03.2025
TEAM: SB, EG

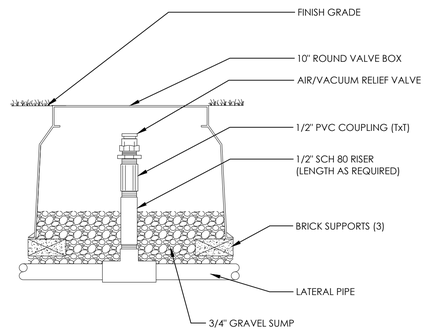

9 AIR RELIEF PVC RISER

1 1/2" = 1'-0" P-MF-2516-01

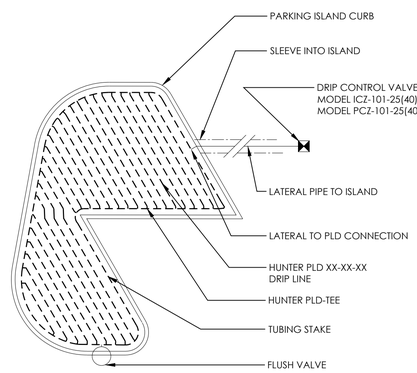

8 IRREGULAR ISLAND A

1" = 1'-0" P-MF-2516-19

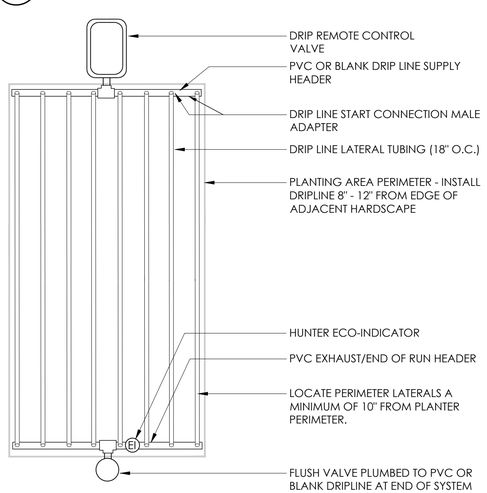

7 PLAN DIAGRAM: LANDSCAPE DRIP LINE LAYOUT

1" = 1'-0" P-MF-2516-04

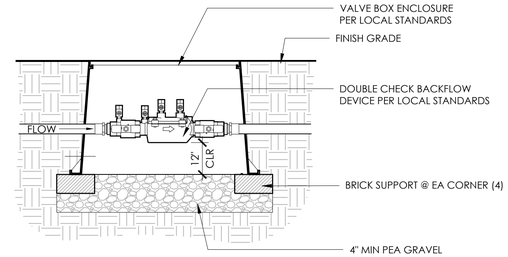

NOTES:
1. MIN. 6" CLEARANCE ON BOTH SIDES OF DEVICE. COMPLY TO ALL CODES THAT GOVERN.
2. GRADE SURROUNDING AREA TO PROVIDE DRAINAGE AWAY FROM DEVICE
3. TEST COCKS MUST BE EQUIPED WITH BRASS PIPE PLUGS. "Y" PATTERN DEVICES MAY BE ROTATED TO FACILITATE ACCESS.
T ORO S NES R OR TO NST T ON O T E DE E

6 SECTION: DOUBLE CHECK BACKFLOW ASSEMBLY

1 1/2" = 1'-0" P-MF-2516-20

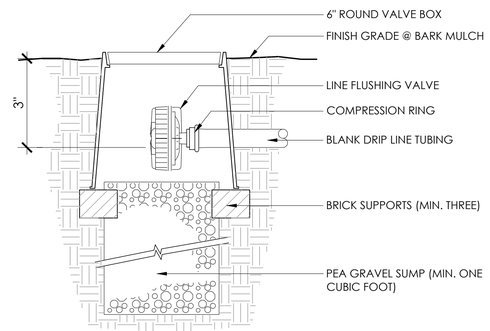

5 DETAIL: DRIP LINE FLUSH VALVE

1" = 1'-0" P-MF-2516-10

DET E END:

- HUNTER DECODER (ICD-400) PER PLAN
- HUNTER DECODER STAKE (DECRSTAKE-10) DRIVEN INTO VALVE BOX BASE GRAVEL/SOIL. SECURE DECODER TO STAKE WITH BOTTOM OF DECODER FACING UP AND FASTENED TO STAKE USING TWO (2) PROVIDED ZIP TIES
- INCOMING HUNTER JACKETED IDWIRE PATH PER PLAN WITH 36-IN [1m] LOOP OF SLACK WIRE, MEASURED FROM TOP OF VALVE BOX, NEATLY COILED INSIDE VALVE BOX
- RED AND BLUE WIRES FROM DECODER TO IDWIRE SPLICES
- BARE COPPER GROUND WIRE FROM DECODER TO GROUNDING DEVICE, ROD OR PLATE, SEE PLAN FOR GROUND LOCATIONS AND TYPE
- STATION WIRE FROM DECODER OUTPUT TO VALVE SOLENOID WIRES
- IDWIRE PATH SPLICE WITH DECODER OUTPUT USING 3M DBRY/6 INSTALLED PER MANUFACTURERS INSTRUCTIONS
- VALVE SOLENOID WIRE SPLICE WITH DECODER OUTPUT USING 3M DBRY/6 INSTALLED PER MANUFACTURERS INSTRUCTIONS
- VALVE SOLENOID WIRE WITH 18-IN [45cm] COIL TO SPLICE WITH DECODER OUTPUT
- OUTGOING HUNTER JACKETED IDWIRE PATH PER PLAN WITH 36-IN [1m] LOOP OF SLACK WIRE, MEASURED FROM TOP OF VALVE BOX, NEATLY COILED INSIDE VALVE BOX
- IRRIGATION VALVE, VALVE BOX, AND RELATED ITEMS PER IRRIGATION PLAN AND DETAILS

DETAIL NOTES:

A. CONTRACTOR SHALL INDICATE ASSOCIATED VALVE NUMBER(S) ON MANUFACTURER PROVIDED LABEL ON DECODER WITH PERMANENT MARKER

B. CONTRACTOR SHALL LOCATE SPLICE WITH IDWIRE AND DECODER OUTPUT IN THE MIDDLE OF 36-IN[1m] ID WIRE LOOP IN VALVE BOX

C. CONTRACTOR SHALL CONNECT BARE COPPER GROUND WIRE FROM DECODER OUTPUT TO GROUND DEVICE WIRE USING ERICO PG11L KIT PER MANUFACTURES INSTRUCTIONS

D. EARTH GROUND TO BE A MINIMUM OF 8 FEET AWAY FROM DECODER AND AT A RIGHT ANGLE TO THE TWO WIRE PATH

E. GROUNDING SHALL BE INSTALLED AT A MINIMUM OF EVERY 12TH DECODER OR 1,000', WHICHEVER OCCURS FIRST

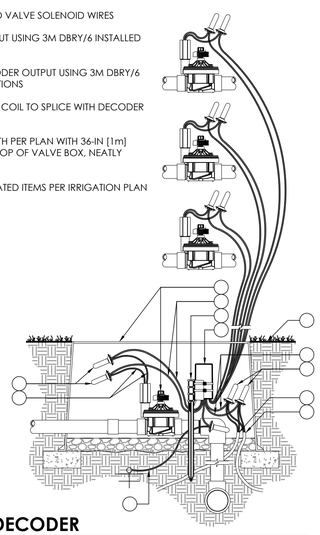

4 DETAIL: ICD-400 DECODER

1 1/2" = 1'-0" P-MF-2516-42

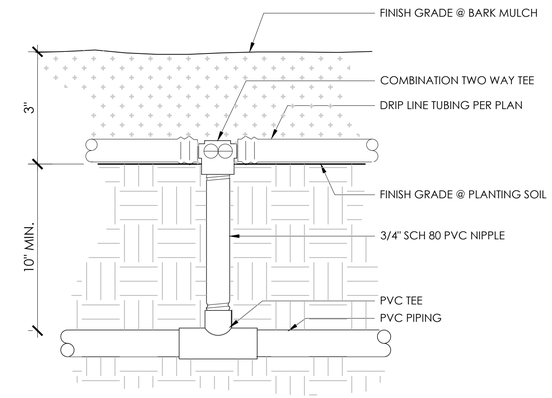

3 DETAIL: DRIPLINE SOURCE CONNECTION

1" = 1'-0" P-MF-2516-09

DET E END:

- HUNTER DECODER (ICD-200) PER PLAN
- HUNTER DECODER STAKE (DECRSTAKE-10) DRIVEN INTO VALVE BOX BASE GRAVEL/SOIL. SECURE DECODER TO STAKE WITH BOTTOM OF DECODER FACING UP AND FASTENED TO STAKE USING TWO (2) PROVIDED ZIP TIES
- INCOMING HUNTER JACKETED IDWIRE PATH PER PLAN WITH 36-IN [1m] LOOP OF SLACK WIRE, MEASURED FROM TOP OF VALVE BOX, NEATLY COILED INSIDE VALVE BOX
- RED AND BLUE WIRES FROM DECODER TO IDWIRE SPLICES
- BARE COPPER GROUND WIRE FROM DECODER TO GROUNDING DEVICE, ROD OR PLATE, SEE PLAN FOR GROUND LOCATIONS AND TYPE
- STATION WIRE FROM DECODER OUTPUT TO VALVE SOLENOID WIRES
- IDWIRE PATH SPLICE WITH DECODER OUTPUT USING 3M DBRY/6 INSTALLED PER MANUFACTURERS INSTRUCTIONS
- VALVE SOLENOID WIRE SPLICE WITH DECODER OUTPUT USING 3M DBRY/6 INSTALLED PER MANUFACTURERS INSTRUCTIONS
- VALVE SOLENOID WIRE WITH 18-IN [45cm] COIL TO SPLICE WITH DECODER OUTPUT
- STATION WIRE FROM DECODER OUTPUT TO VALVE SOLENOID WIRES IN A SEPARATE VALVE BOX
- WIRE CONNECTION FROM DECODER OUTPUT TO SEPARATE SOLENOID SHALL BE 14 AWG, PE INSULATED
- OUTGOING HUNTER JACKETED IDWIRE PATH PER PLAN WITH 36-IN [1m] LOOP OF SLACK WIRE, MEASURED FROM TOP OF VALVE BOX, NEATLY COILED INSIDE VALVE BOX
- IRRIGATION VALVE, VALVE BOX, AND RELATED ITEMS PER IRRIGATION PLAN AND DETAILS

DETAIL NOTES:

A. CONTRACTOR SHALL INDICATE ASSOCIATED VALVE NUMBER(S) ON MANUFACTURER PROVIDED LABEL ON DECODER WITH PERMANENT MARKER

B. CONTRACTOR SHALL LOCATE SPLICE WITH IDWIRE AND DECODER OUTPUT IN THE MIDDLE OF 36-IN[1m] ID WIRE LOOP IN VALVE BOX

C. CONTRACTOR SHALL CONNECT BARE COPPER GROUND WIRE FROM DECODER OUTPUT TO GROUND DEVICE WIRE USING ERICO PG11L KIT PER MANUFACTURES INSTRUCTIONS

D. 14 AWG PE WIRE DISTANCE FROM OUTPUT SOLENOID TO SOLENOID IN SEPARATE VALVE BOX SHALL NOT EXCEED 150-FT [45m]

E. EARTH GROUND TO BE A MINIMUM OF 8 FEET AWAY FROM DECODER AND AT A RIGHT ANGLE TO THE TWO WIRE PATH

F. GROUNDING SHALL BE INSTALLED AT A MINIMUM OF EVERY 12TH DECODER OR 1,000', WHICHEVER OCCURS FIRST

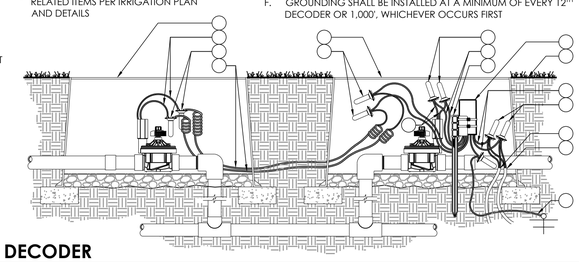

2 DETAIL: ICD-200 DECODER

1 1/2" = 1'-0" P-MF-2516-41

DET E END:

1. HUNTER DECODER (ICD-100) PER PLAN
2. HUNTER DECODER STAKE (DECRSTAKE-10) DRIVEN INTO VALVE BOX BASE GRAVEL/SOIL. SECURE DECODER TO STAKE WITH BOTTOM OF DECODER FACING UP AND FASTENED TO STAKE USING TWO (2) PROVIDED ZIP TIES
3. INCOMING HUNTER JACKETED IDWIRE PATH PER PLAN WITH 36-IN [1m] LOOP OF SLACK WIRE, MEASURED FROM TOP OF VALVE BOX, NEATLY COILED INSIDE VALVE BOX
4. RED AND BLUE WIRES FROM DECODER TO IDWIRE SPLICES
5. BARE COPPER GROUND WIRE FROM DECODER TO GROUNDING DEVICE, ROD OR PLATE, SEE PLAN FOR GROUND LOCATIONS AND TYPE
6. STATION WIRE FROM DECODER OUTPUT TO VALVE SOLENOID WIRES
7. IDWIRE PATH SPLICE WITH DECODER OUTPUT USING 3M DBRY/6 INSTALLED PER MANUFACTURERS INSTRUCTIONS
8. VALVE SOLENOID WIRE SPLICE WITH DECODER OUTPUT USING 3M DBRY/6 INSTALLED PER MANUFACTURERS INSTRUCTIONS
9. VALVE SOLENOID WIRE WITH 18-IN [45cm] COIL TO SPLICE WITH DECODER OUTPUT
10. OUTGOING HUNTER JACKETED IDWIRE PATH PER PLAN WITH 36-IN [1m] LOOP OF SLACK WIRE, MEASURED FROM TOP OF VALVE BOX, NEATLY COILED INSIDE VALVE BOX
11. IRRIGATION VALVE, VALVE BOX, AND RELATED ITEMS PER IRRIGATION PLAN AND DETAILS

DETAIL NOTES:

A. CONTRACTOR SHALL INDICATE ASSOCIATED VALVE NUMBER(S) ON MANUFACTURER PROVIDED LABEL ON DECODER WITH PERMANENT MARKER

B. CONTRACTOR SHALL LOCATE SPLICE WITH IDWIRE AND DECODER OUTPUT IN THE MIDDLE OF 36-IN[1m] ID WIRE LOOP IN VALVE BOX

C. CONTRACTOR SHALL CONNECT BARE COPPER GROUND WIRE FROM DECODER OUTPUT TO GROUND DEVICE WIRE USING ERICO PG11L KIT PER MANUFACTURES INSTRUCTIONS

D. EARTH GROUND TO BE A MINIMUM OF 8 FEET AWAY FROM DECODER AND AT A RIGHT ANGLE TO THE TWO WIRE PATH

E. GROUNDING SHALL BE INSTALLED AT A MINIMUM OF EVERY 12TH DECODER OR 1,000', WHICHEVER OCCURS FIRST

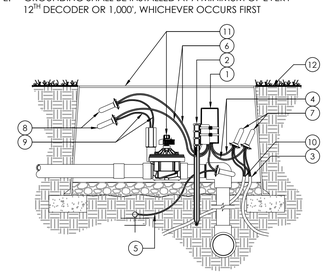

1 DETAIL: ICD-100 DECODER

1 1/2" = 1'-0" P-MF-2516-40

TERRAIN
LANDSCAPE ARCHITECTURE
310 Oak Street, Suite 3
Ashland, Oregon 97520
541.500.4776
TERRAINARCH.COM

CALDERA OAKS SUBDIVISION
300 CLAY STREET
ASHLAND, OR 97520

REGISTERED LANDSCAPE ARCHITECT
REG. # 0596
Piper von Chamier
OREGON
03/11/2004

REVISIONS

#	DATE	DESCRIPTION
-		
-		
-		
-		
-		

PERMIT SET

IRRIGATION DETAILS

L5.4

PROJECT NO. 2516
07.03.2025
TEAM: SB, EG

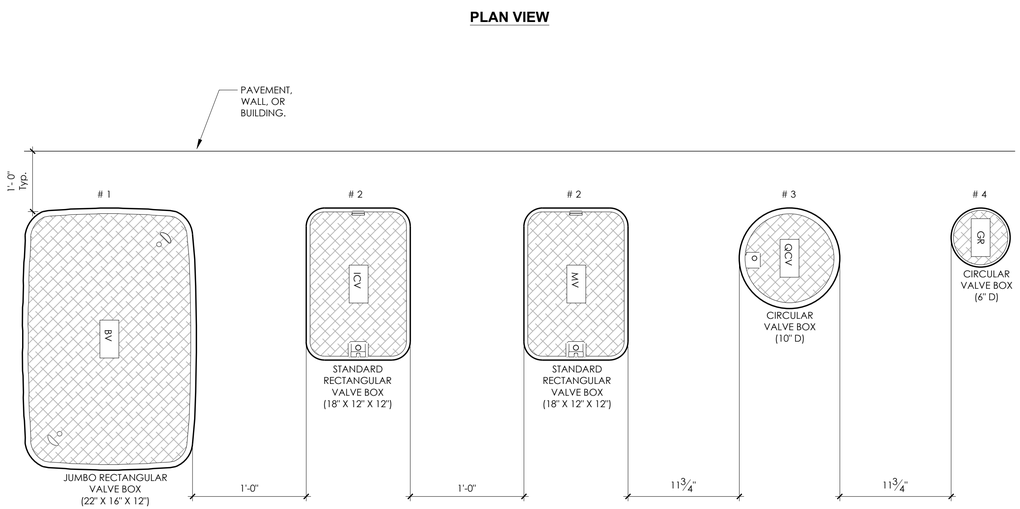

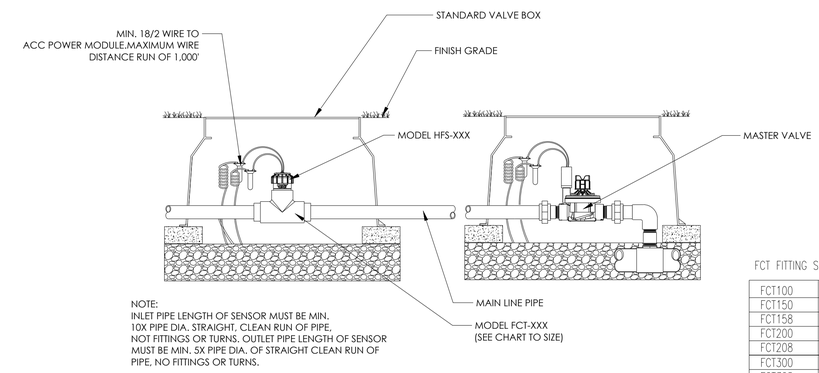

NOTE:
INLET PIPE LENGTH OF SENSOR MUST BE MIN. 10X PIPE DIA. STRAIGHT, CLEAN RUN OF PIPE. NOT FITTINGS OR TURNS. OUTLET PIPE LENGTH OF SENSOR MUST BE MIN. 5X PIPE DIA. OF STRAIGHT CLEAN RUN OF PIPE, NO FITTINGS OR TURNS.

FCT FITTING SELECTION

FCT100	1 INCH	SCH. 40
FCT150	1.5 INCH	SCH. 40
FCT158	1.5 INCH	SCH. 80
FCT200	2 INCH	SCH. 40
FCT208	2 INCH	SCH. 80
FCT300	3 INCH	SCH. 40
FCT308	3 INCH	SCH. 80
FCT400	4 INCH	SCH. 40

3 HFS FLOW SENSOR

1 1/2" = 1'-0"

P-MF-2516-05

Water type	Controller	Designation	Box size	Lid Color	Identification Guide
PW	A	MV	# 2	Green	Master valve
PW	A	FS	# 2	Green	Flow sensor
PW	A	HM	# 2	Green	Hydrometer
PW	A	BV	# 2	Green	Ball valve 3" or less
PW	A	BV	# 1	Green	Ball valve 4" or more
PW	A	GV	# 2	Green	Gate valve
PW	A	ARV	# 2	Green	Air release valve
PW	A	QCV	# 3	Green	Quick coupler valve
PW	A	RCV	# 2	Green	Remote control valve
PW	A	MS	# 2	Green	Moisture sensor
PW	A	GR	# 4	Green	Grounding rod
PW	A	SB	# 3	Green	Splice box
PW	A	FC	# 3	Green	Future connection

EXAMPLE

POTABLE WATER SYSTEM ON CONTROLLER 'A', REMOTE CONTROL VALVE STATION # 3.

NOTES:

1- VALVE BOX # 1 THRU # 3 SHALL HAVE STAINLESS STEEL LOCKING HARDWARE.
2- VALVE BOXES SHALL BE LABELED BY HOT IRON BRANDING OR ALUMINUM ASPHALTIC BASE WATER PROOF PAINT.
3- LOCATE VALVE ASSEMBLIES IN PLANTING AREA.
4- VALVE LOCATIONS SHALL BE APPROVED BY THE OWNER'S REPRESENTATIVE PRIOR TO INSTALLATION.
5- VALVE BOXES SHALL BE CENTERED ABOVE VALVE ASSEMBLIES TO FACILITATE ACCESS AND MAINTENANCE.
6- VALVE BOXES SHALL BE FLUSH WITH FINISHED GRADE.
7- VALVE BOXES SHALL BE SET PARALLEL TO EACH OTHER AND PERPENDICULAR TO THE EDGE OF PAVEMENT.
8- SEE OTHER IRRIGATION DETAILS FOR FURTHER INFORMATION.

2 VALVE BOX LAYOUT

1 1/2" = 1'-0"

P-MF-2516-31

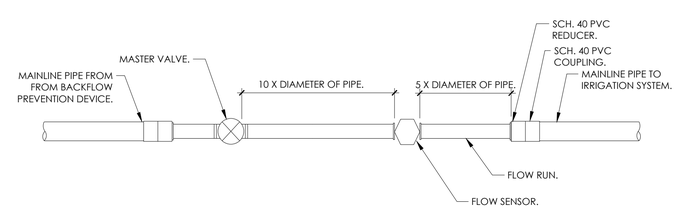

NOTES:
1- FLOW SENSOR SHALL BE OF MAKE AND MODEL AS RECOMMENDED BY THE CONTROLLER MANUFACTURER.

2- FLOW SENSOR WIRE SHALL BE PER MANUFACTURER'S SPECIFICATIONS.

3- MASTER VALVE WIRE SHALL BE DIRECT BURIAL 14 AWG WIRE (OR LARGER). COLOR: BLACK.

4- ALL WIRE RUNS SHALL BE CONTINUOUS WITHOUT ANY SPLICES.

5- SEE MASTER VALVE DETAIL AND FLOW SENSOR DETAIL FOR FURTHER INFORMATION.

6- FLOW RUN PIPE SHALL BE REDUCED DOWN ONE (1) PIPE SIZE AS INDICATED.

EXAMPLE
3" MAINLINE = 2-1/2" FLOW RUN
2-1/2" MAINLINE = 2" FLOW RUN
2" MAINLINE = 1-1/2" FLOW RUN

1 MASTER VALVE AND FLOW SENSOR LAYOUT

1 1/2" = 1'-0"

P-MF-2516-02

Hunter®

TERRAIN
LANDSCAPE ARCHITECTURE
310 Oak Street, Suite 3
Ashland, Oregon 97520

541.500.4776
TERRAINARCH.COM

CALDERA OAKS SUBDIVISION
300 CLAY STREET
ASHLAND, OR 97520

REGISTERED LANDSCAPE ARCHITECT
REG. # 0596
Piper von Chamier
OREGON
03/11/2004

REVISIONS

#	DATE	DESCRIPTION
-		
-		
-		
-		
-		

PERMIT SET

IRRIGATION DETAILS

L5.5

PROJECT NO. 2516
07.03.2025
TEAM: SB, EG

Pilot Rock
PARK · SEAT · AMP
[redacted]

RJ THOMAS MFG. CO., INC.
PO BOX 946
CHEROKEE, IA 51012-0946
TOLL FREE: 1-800-762-5002
PHONE: (712) 225-5115
www.pilotrock.com

☑ SELECT DESIRED OPTION:

☐ B18 BOLT-DOWN BASE PLATE BASE (B18)

☐ S6 SWIVEL SHELF (S6)

MODEL NUMBER	DIMENSION	
	A	B
ASW-20	15 1/8"	19 3/8"
ASW-24	15 1/8"	23 3/8"

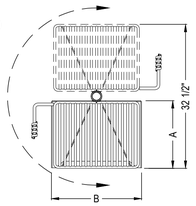

PLAN VIEW

PERSPECTIVE
STANDARD B2 EMBEDDED POST INSTALLATION

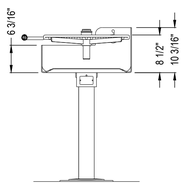

FRONT ELEVATION
OPTIONAL B18 SURFACE MOUNT INSTALLATION

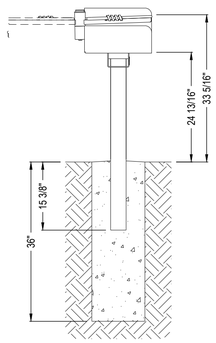

SIDE ELEVATION
STANDARD B2 EMBEDDED POST INSTALLATION

MANUFACTURER NOTES:
1. GRATE ROTATES 180° FROM OVER FIRE WITH 5 LBS. OF FORCE. HANDLE IS NEVER OVER FIRE.

NOTES:
1. INSTALLATION TO BE COMPLETED IN ACCORDANCE WITH MANUFACTURER'S SPECIFICATIONS.
2. DO NOT SCALE DRAWING.
3. THIS DRAWING IS INTENDED FOR USE BY ARCHITECTS, ENGINEERS, CONTRACTORS, CONSULTANTS AND DESIGN PROFESSIONALS FOR PLANNING PURPOSES ONLY. THIS DRAWING MAY NOT BE USED FOR CONSTRUCTION.
4. ALL INFORMATION CONTAINED HEREIN WAS CURRENT AT THE TIME OF DEVELOPMENT BUT MUST BE REVIEWED AND APPROVED BY THE PRODUCT MANUFACTURER TO BE CONSIDERED ACCURATE.
5. CONTRACTOR'S NOTE: FOR PRODUCT AND COMPANY INFORMATION VISIT www.CADdetails.com/info AND ENTER REFERENCE NUMBER L7.0 PRELIM DETAILS

CHARCOAL GRILLS

ACCESSIBLE PARK GRILL (ASW-20 & ASW-24)

L7.0 PRELIM DETAILS — REVISION DATE 03/07/2025

PROTECTED BY COPYRIGHT ©2019 CADDETAILS.COM LTD. — CADdetails.com

8 DETAIL: CHARCOAL GRILL
Scale: NTS

DERO | Bike **Hook Solo** — **Submittal Sheet**

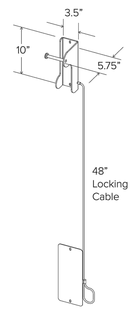

CAPACITY	1 Bike
MATERIALS	**Main Body:** 3/16" steel plate **Security Cable:** 3/16" vinyl coated cable **Optional Wall Guard:** 14g aluminum plate
FINISHES	☐ **Powder Coat** A black powder coat finish is our standard option. Our powder coat finish assures a high level of adhesion and durability by following these steps: 1. Sandblast 2. Epoxy primer electrostatically applied 3. Final thick TGIC polyester powder coat ☐ **Galvanized** An after fabrication hot dipped galvanized finish.
MOUNT OPTIONS	☐ **Wall Only** Concrete wall mounted use 3/8" drop-in anchors with tamperproof screws. Wood and drywall mounted use 1/4" lag screws. Concrete block uses drive-in anchors.

6 DETAIL: LOCKABLE BIKE HANGER
Scale: NTS

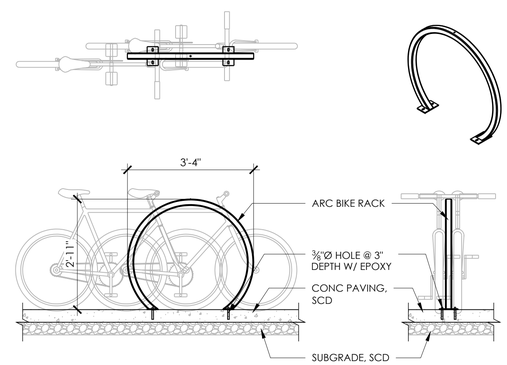

5 DETAIL: BIKE RACK
Scale: 1/2" = 1'-0"

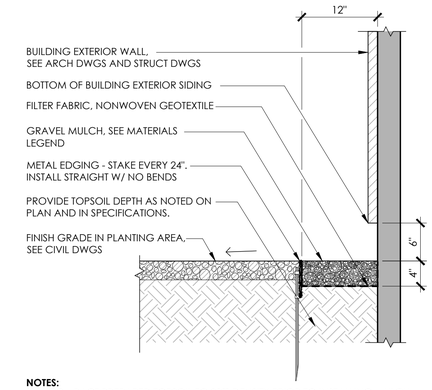

PRECEDENT IMAGE:
GRAVEL MULCH AT BUILDING PERIMETER

NOTES:
1. COMPACT PREPARED TOPSOIL TO 80% DENSITY PRIOR TO INSTALLING MULCH.
2. GRADES SHOULD SLOPE AWAY FROM BUILDINGS, SEE CIVIL DWGS.
3. SEE MATERIALS LEGEND FOR GRAVEL MULCH AND EDGING INFORMATION

3 DETAIL AND PRECEDENT IMAGE: GRAVEL MULCH BAND AT BUILDINGS
Scale: 1" = 1'-0"

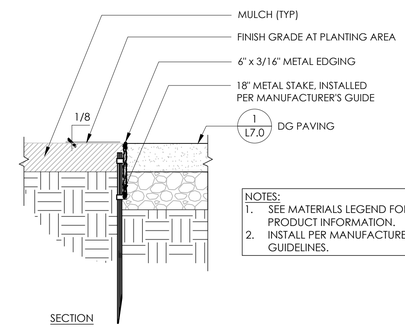

SECTION

NOTES:
1. SEE MATERIALS LEGEND FOR METAL EDGING PRODUCT INFORMATION.
2. INSTALL PER MANUFACTURER'S INSTALLATION GUIDELINES.

2 DETAIL: METAL EDGING
Scale: 1 1/2" = 1'-0"

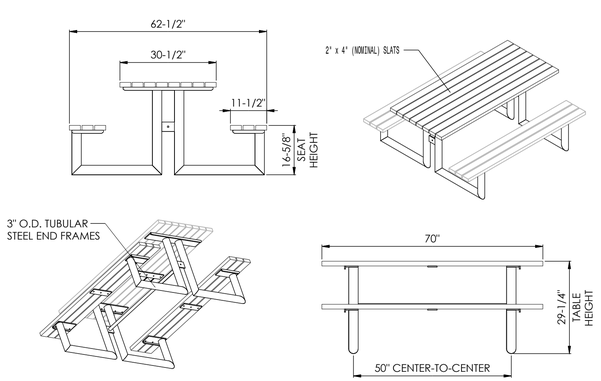

7 DETAIL: PICNIC TABLE
Scale: NTS

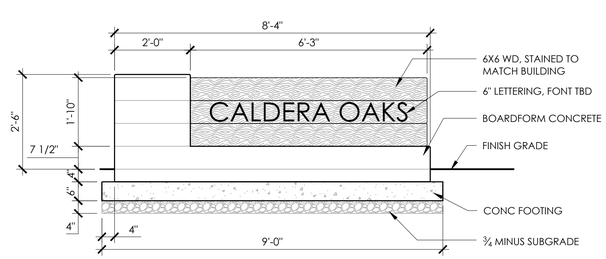

4 DETAIL: MONUMENT SIGN
Scale: NTS

NOTES:
1. BINDER SHALL BE ORGANIC-LOCK OR APPROVED EQUAL.
2. PRIOR TO INSTALLING OL BLENDED AGGREGATE, MAKE SURE THE MATERIAL IS PROPERLY BLENDED WITH IDEAL MOISTURE CONTENT BEFORE SPREADING. ADD WATER TO ACHIEVE APPROXIMATELY 8-10% TOTAL MOISTURE. TEST USING A SNOWBALL TEST. BE SURE NOT TO OVER-WATER.
3. ENSURE SURFACE WATERSHED OFF AND AWAY FROM AGGREGATE MATERIAL. IF SLOPE OF PROJECT AREA IS LESS THAN 2%, A CROWN SHOULD BE INCORPORATED INTO THE PATHWAY. IF SLOPE IS GREATER THAN 2%, INCORPORATE A CROSS SLOPE INTO THE PATHWAY.
4. SEE MANUFACTURER'S INSTALLATION GUIDE FOR FURTHER INFORMATION.
5. FINISHED PAVING SHALL BE STABLE, FIRM, AND SLIP RESISTANT FOR ADA COMPLIANCE.

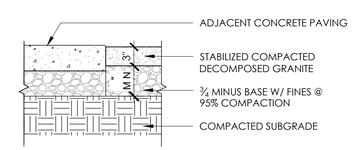

SECTION: DG @ POURED CONCRETE EDGE

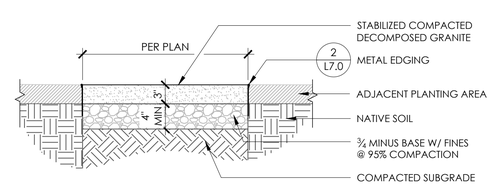

SECTION: DECOMPOSED GRANITE PAVING W/ METAL EDGING

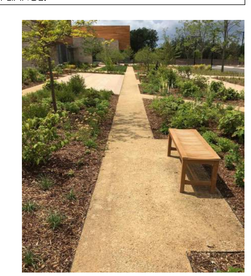

1 DETAIL: DECOMPOSED GRANITE (DG) PAVING
Scale: 1" = 1-0"

TERRAIN
LANDSCAPE ARCHITECTURE
310 Oak Street, Suite 3
Ashland, Oregon 97520
541.500.4776
TERRAINARCH.COM

CALDERA OAKS SUBDIVISION
300 CLAY STREET
ASHLAND, OR 97520

REGISTERED LANDSCAPE ARCHITECT
REG. # 0596
Piper von Chamier
OREGON
03/11/2004

REVISIONS

#	DATE	DESCRIPTION
-		
-		
-		
-		
-		

PERMIT SET

LANDSCAPE DETAILS

L7.0

PROJECT NO. 2516
07.03.2025
TEAM: SB, EG

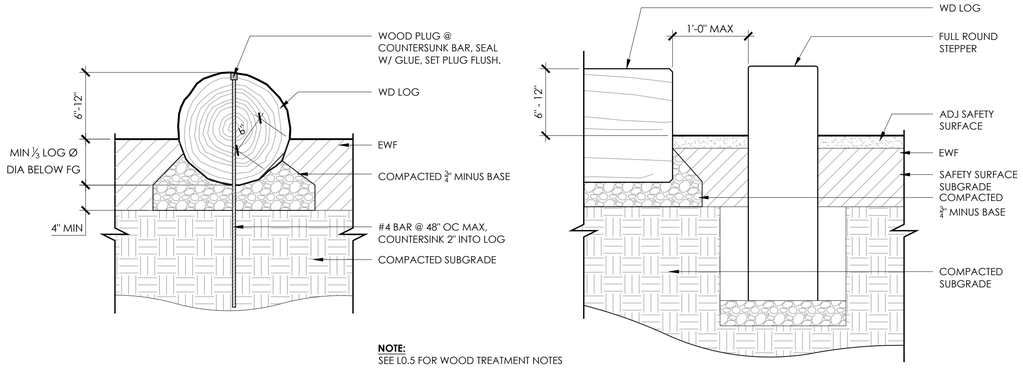

NOTE:
SEE L0.5 FOR WOOD TREATMENT NOTES

8 PRECEDENT IMAGES: NATURE PLAY AREA
Scale: NTS

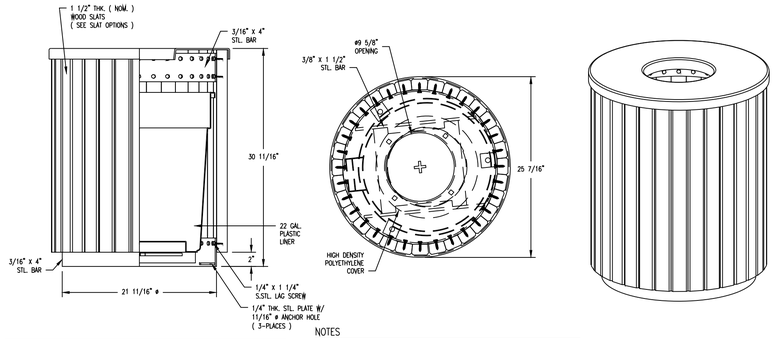

DuMor, inc. RECEPTACLE 70-22

NOTES
1.) ALL STL. MEMBERS COATED W/ ZINC RICH EPOXY THEN FINISHED W/ BLACK POLYESTER POWDER COATING.
2.) 1/2" X 3 3/4" EXPANSION ANCHOR BOLTS PROVIDED.

WOOD OPTIONS
'C' & BTR. DOUGLAS FIR KD S4S EE

3 DETAIL: TRASH RECEPTACLES
Scale: NTS

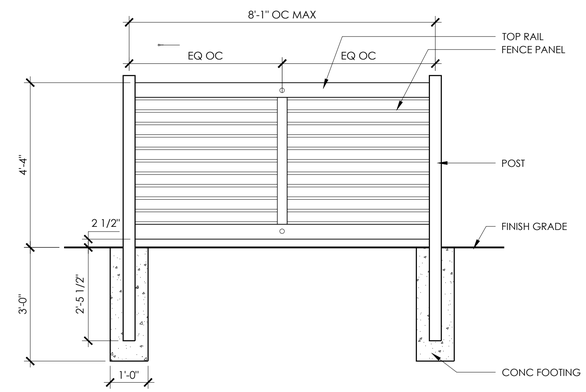

7 DETAIL: 4' VINYL FENCE
Scale: NTS

Top and Side Views:

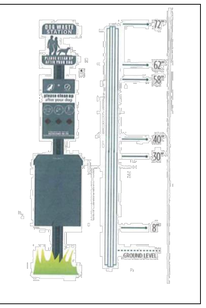

5 CUTSHEET: DOG WASTE STATION BY DOG-ON-IT PARKS OR EQ
Scale: NTS

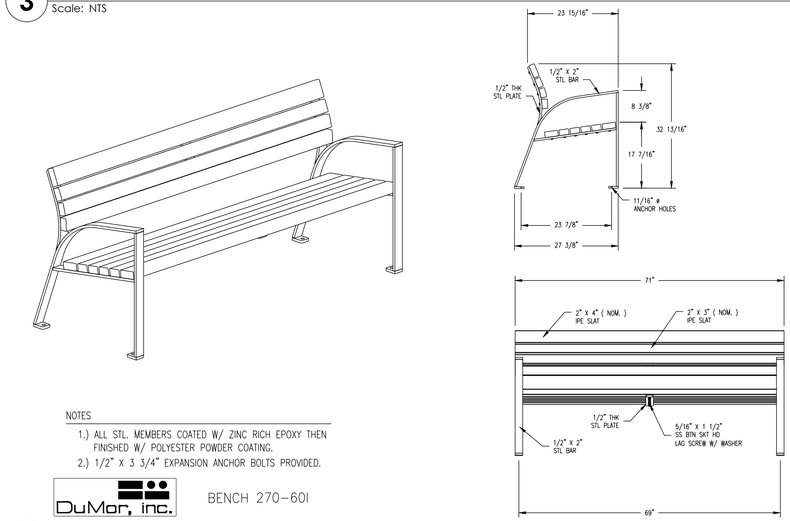

NOTES
1.) ALL STL. MEMBERS COATED W/ ZINC RICH EPOXY THEN FINISHED W/ POLYESTER POWDER COATING.
2.) 1/2" X 3 3/4" EXPANSION ANCHOR BOLTS PROVIDED.

DuMor, inc. BENCH 270-601

2 DETAIL: BENCH
Scale: NTS

NOTES:
1. ALL FASTENERS TO BE GALVANIZED.
2. ALL EXPOSED CUT ENDS TO BE SANDED SMOOTH.
3. HORIZONTAL WIRE PANELS TO BE LEVEL W/ BOTH TOP AND BOTTOM VERTICAL RAILS.
4. WOOD FINISH TBD.

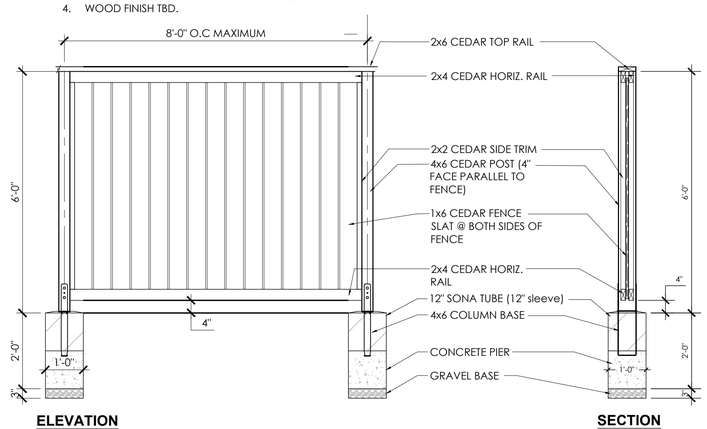

6 DETAIL: 6' CEDAR FENCE
Scale: NTS

Includes Pedestal

PHOTOS ARE TO SHOW INTENT; FINAL PRODUCT TBD

All Aluminum Construction

SALSBURY INDUSTRIES

4 PRECEDENT IMAGE: CLUSTER MAILBOXES WITH PARCEL BOXES BY MAILBOXES.COM OR EQ
Scale: NTS

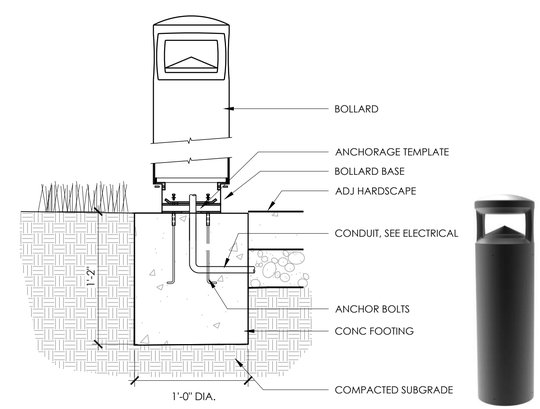

1 DETAIL: BOLLARD LIGHT
Scale: NTS

TERRAIN
LANDSCAPE ARCHITECTURE
310 Oak Street, Suite 3
Ashland, Oregon 97520
541.500.4776
TERRAINARCH.COM

CALDERA OAKS SUBDIVISION
300 CLAY STREET
ASHLAND, OR 97520

REGISTERED LANDSCAPE ARCHITECT
REG. # 0596
Piper von Chamier
OREGON
03/11/2004

REVISIONS

#	DATE	DESCRIPTION
-		
-		
-		
-		
-		

PERMIT SET

LANDSCAPE DETAILS

L7.1

PROJECT NO. 2516
07.03.2025
TEAM: SB, EG

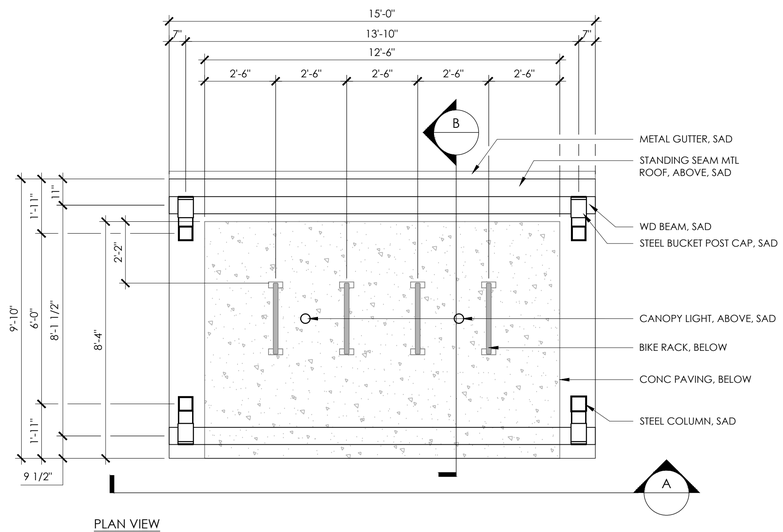

PLAN VIEW

NOTE:
1. SEE ARCHITECTURAL DRAWING SHEET AJ9.5 EXTERIOR DETAILS - CANOPY FOR MATERIAL AND FINISH INFORMATION.
2. BIKE CANOPY TO MATCH ADJACENT MULTI-FAMILY RESIDENTIAL ENTRY CANOPIES, SAD.
3. BIKE SHELTER LIGHTING TO MATCH ADJACENT MULT-FAMILY RESIDENTIAL ENTRY CANOPY CAN LIGHTS, SAD.

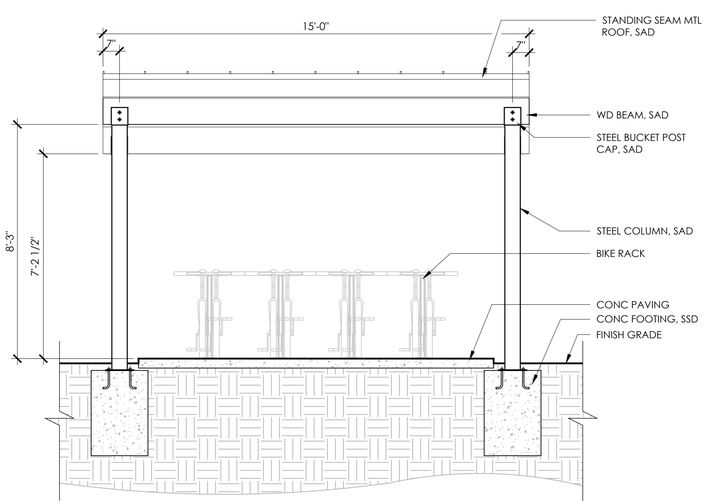

A - ELEVATION

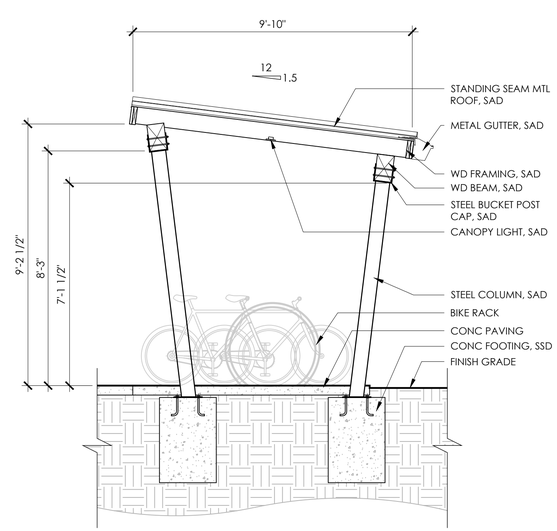

B - SECTION

4 DETAIL: BIKE SHELTER
Scale: NTS

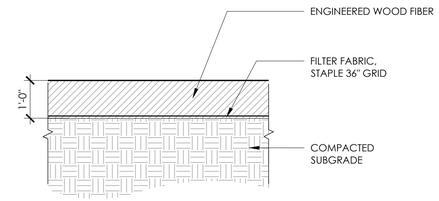

3 DETAIL: ENGINEERED WOOD FIBER (EWF)
Scale: NTS

NOTES:
1. IRRIGATION HEADS SHALL BE ADJUSTED IN FIELD TO AVOID BOULDERS.
2. BURY THE BOULDERS TO A MINIMUM OF 1/3 THE TOTAL HEIGHT.
3. BOULDERS INTEGRATED INTO CLASSROOM BARRIER TO BE 24"-36", FLAT TOP & BOTTOM, BLACK & WHITE GRANITE. CONTACT MIKE TAYLOR @ HILTON FUEL & SUPPLY. (541) 664-3374.
4. BOULDERS IN PLAY SPACE TO BE SIZED PER PLAN, FLAT TOP AND BOTTOM, BLACK & WHITE GRANITE. CONTACT MIKE TAYLOR @ HILTON FUEL & SUPPLY. (541) 664-3374.
5. ALL BOULDERS ARE TO BE APPROVED BY LANDSCAPE ARCHITECT. CONTACT 72 HRS PRIOR.
6. GROUP BOULDERS AS SHOWN ON PLANS.
7. COORDINATE LAYOUT IN FIELD W/ OWNER'S REP.

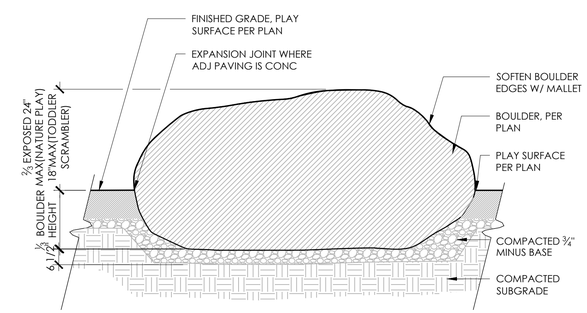

2 DETAIL: EMBEDDED BOULDER
Scale: NTS

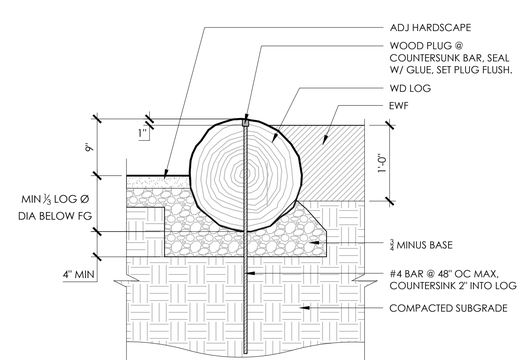

1 DETAIL: LOG BORDER
Scale: NTS

TERRAIN
LANDSCAPE ARCHITECTURE
310 Oak Street, Suite 3
Ashland, Oregon 97520
541.500.4776
TERRAINARCH.COM

CALDERA OAKS SUBDIVISION
300 CLAY STREET
ASHLAND, OR 97520

REGISTERED LANDSCAPE ARCHITECT
REG. # 0596
Piper von Chamier
OREGON
03/11/2004

REVISIONS

#	DATE	DESCRIPTION
-		
-		
-		
-		
-		

PERMIT SET

LANDSCAPE DETAILS

L7.2

PROJECT NO. 2516
07.03.2025
TEAM: SB, EG

9/22/2025 9:42:28 AM

AREA OF MULTI-FAMILY DEVELOPMENT:
21,120 SF

PRIVATE OPEN SPACE (REAR YARDS AND PATIO):
4,790 SF

PRIVATE OPEN SPACE (AREA BETWEEN BUILDINGS):
2,135 SF

TOTAL PRIVATE OPEN SPACE:
6,925 SF

SCALE: 1" = 30'

15'-0" 30'-0" 60'-0" 120'-0"

SITE - PLAN (1)

SCALE: 1" = 30'-0" (24 X 36)
SCALE: 1" = 60'-0" (11 X 17)

ZONING INFORMATION

BASE ZONE: R-1-3.5 (RESIDENTIAL - SUBURBAN)

OVERLAY ZONES:

SPECIAL DISTRICTS:

MAP & TAX LOT: 391E11CB - 1100

ACERAGE: 4.8 ACRES (209,088 SF)

AUTOMOBILE PARKING

ON-STREET PARKING = 52 SPACES
OFF-STREET SURFACE PARKING = 14 SPACES
OFF-STREET GARAGE PARKING = 35 SPACES
TOTAL - 101 SPACES

SITE AREA

SITE AREA = 209,088 SF

OPEN SPACE

	2,934 SF
	1,414 SF
	3,782 SF
	7,972 SF
TOTAL	16,102 SF

16,102 / 209,088 = .077 = 7.7%

Neighborhood Street - Figure 18.4.6.040.G.4.b

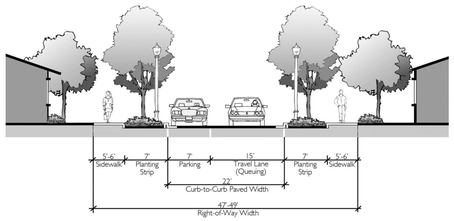

Shared Street - Figure 18.4.6.040.G.8

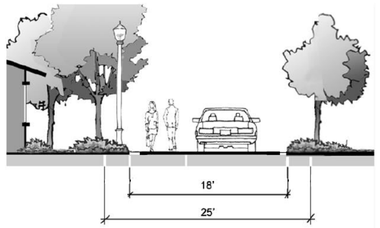

Alley - Figure 18.4.6.040.G.6

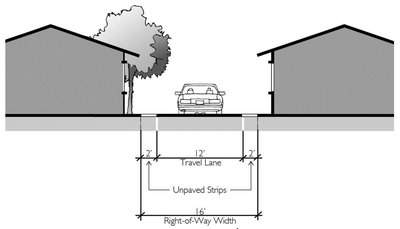

MULTIFAMILY LOT COVERAGE

LOT 22
LOT AREA: 5,439 SF
COVERAGE: 2,393 SF
% OF LOT AREA: 44%

LOT 23
LOT AREA: 5,839 SF
COVERAGE: 2,393 SF
% OF LOT AREA: 41%

LOT 24
LOT AREA: 5,433 SF
COVERAGE: 2,393 SF
% OF LOT AREA: 44%

LOT 24
LOT AREA: 4,424 SF
COVERAGE: 2,393 SF
% OF LOT AREA: 54%

BUILDING SCHEDULE

	BLDG	#OF BLDGS	UNITS/BLDG	UNIT AREA	GARAGE AREA	BUILDING AREA	TOTAL BUILDING AREA
	A	3	1	1,325 SF	-	1,325 SF	3,975 SF
	B	2	1	1,314 SF	-	1,314 SF	2,628 SF
	C	5	1	1,622 SF	-	1,622 SF	8,110 SF
	D	6	2	1,017 SF	-	2,034 SF	12,204 SF
	E	5	1	865 SF	-	865 SF	4,325 SF
	F	6	1	521 SF	510 SF	1,031 SF	6,186 SF
	G	2	1	585 SF	516 SF	1,101 SF	2,202 SF
	H	6	-	-	610 SF	610 SF	3,660 SF
	J	4	4	917 SF	-	3,670 SF	14,680 SF
	K	7	1	540 SF	299 SF	839 SF	5,873 SF

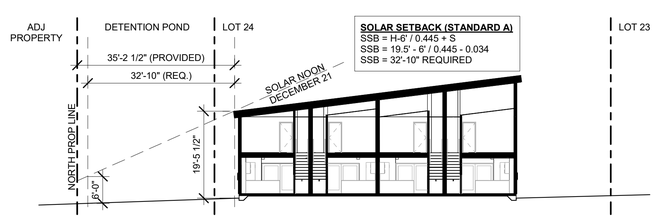

SOLAR SETBACK DIAGRAM - LOT 24 (3)

1/16" = 1'-0"

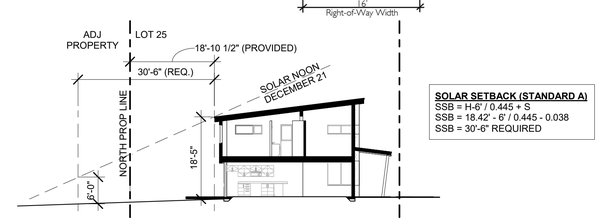

SOLAR SETBACK DIAGRAM - LOT 25 (2)

1/16" = 1'-0"

ksw ARCHITECTS
66 WATER STREET
SUITE 101
ASHLAND, OR
97520
TEL.: 541.488.8200

95% CD

REGISTERED ARCHITECT
RAYMOND J. KISTLER
3172
ASHLAND, OREGON
STATE OF OREGON

SHEET FORMAT = 24" X 36".

CALDERA OAKS
SITE LAYOUT

BENTELLA DEVELOPMENT
300 CLAY STREET
ASHLAND, OR 97520

REVISIONS

SITE PLAN

PROJECT NO.: 25-010
ISSUE DATE: 08.18.2025
SHEET:

A0.1

This document, and the ideas and designs incorporated herein, as an instrument of professional service, is the property of KSW Architects and is not to be used, in whole or in part, for any other project without the written authorization of KSW Architects.

© 2022 KSW Architects, LLC

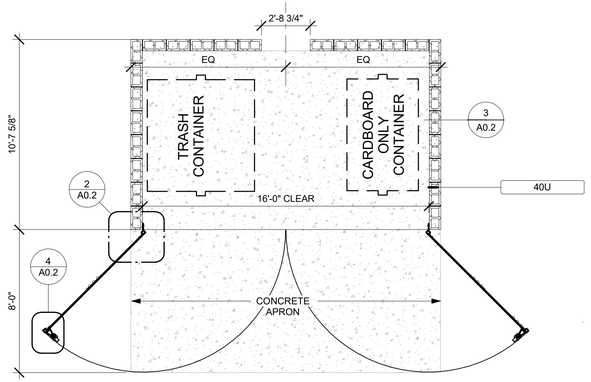

TRASH ENCLOSURE PLAN (5)

SCALE: 1/4" = 1'-0" (24 X 36)
SCALE: 1/8" = 1'-0" (11 X 17)

NOTE: PAINT ALL EXPOSED STEEL COMPONENTS EXCEPT FOR VERTICAL SIDING

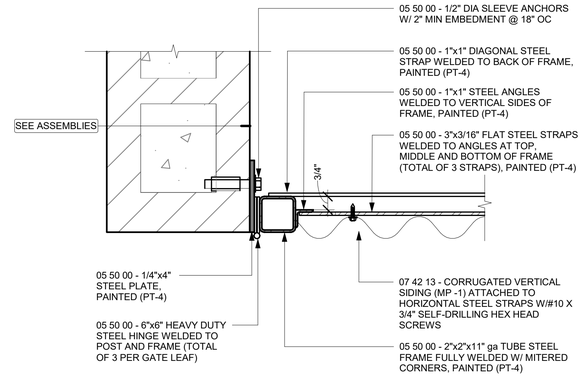

TRASH ENCLOSURE GATE DETAIL (2)

3" = 1'-0"

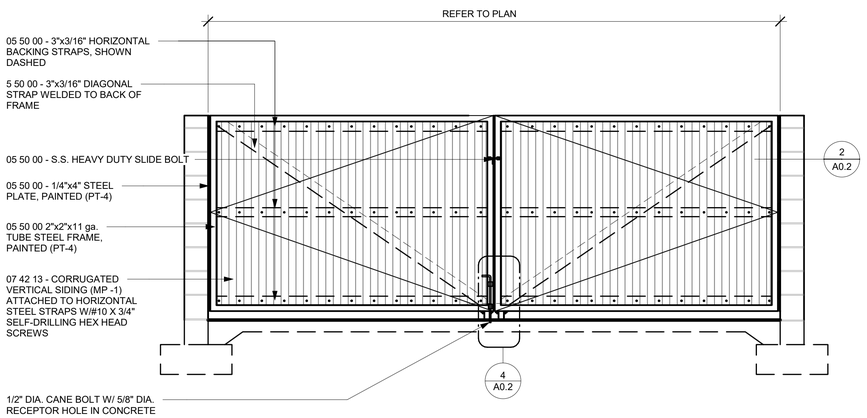

TRASH ENCLOSURE ELVATION (6)

1/2" = 1'-0"

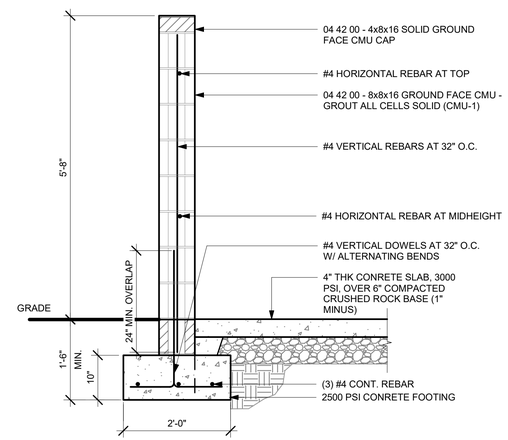

TRASH ENCLOSURE WALL SECTION (3)

3/4" = 1'-0"

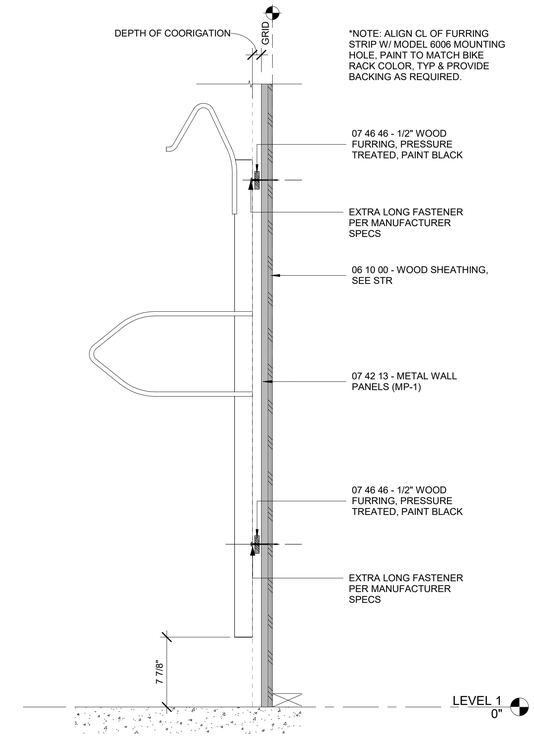

TYP. BIKE LOCK AT METAL WALL (1)

1 1/2" = 1'-0"

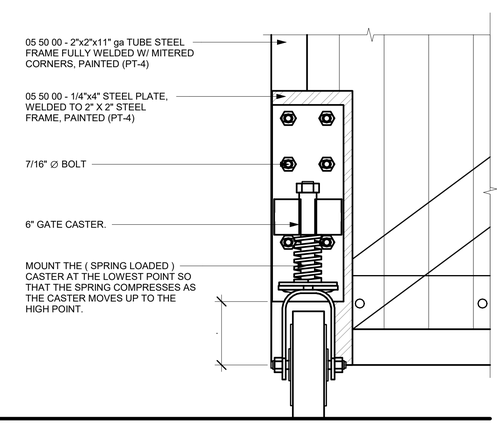

TRASH ENCLOSURE GATE CASTER (4)

3" = 1'-0"

ksw ARCHITECTS
66 WATER STREET
SUITE 101
ASHLAND, OR
97520
TEL.: 541.488.8200

CONSTRUCTION DOCUMENTS

REGISTERED ARCHITECT
RAYMOND J. KISTLER
3172
ASHLAND, OREGON
STATE OF OREGON

CALDERA OAKS: BUILDING J

BENTELLA LLC
300 CLAY ST.
ASHLAND OR. 97520

REVISIONS

SITE DETAILS

PROJECT NO.: 25-010
ISSUE DATE: 07.08.2025
SHEET:

A0.2

8/15/2025 2:27:03 PM
This document, and the ideas and designs incorporated herein, as an instrument of professional service, is the property of Kistler Small + White Architects and is not to be used, in whole or in part, for any other project without the written authorization of Kistler Small + White Architects.
Copywrite 2025 KSW Architects LLC

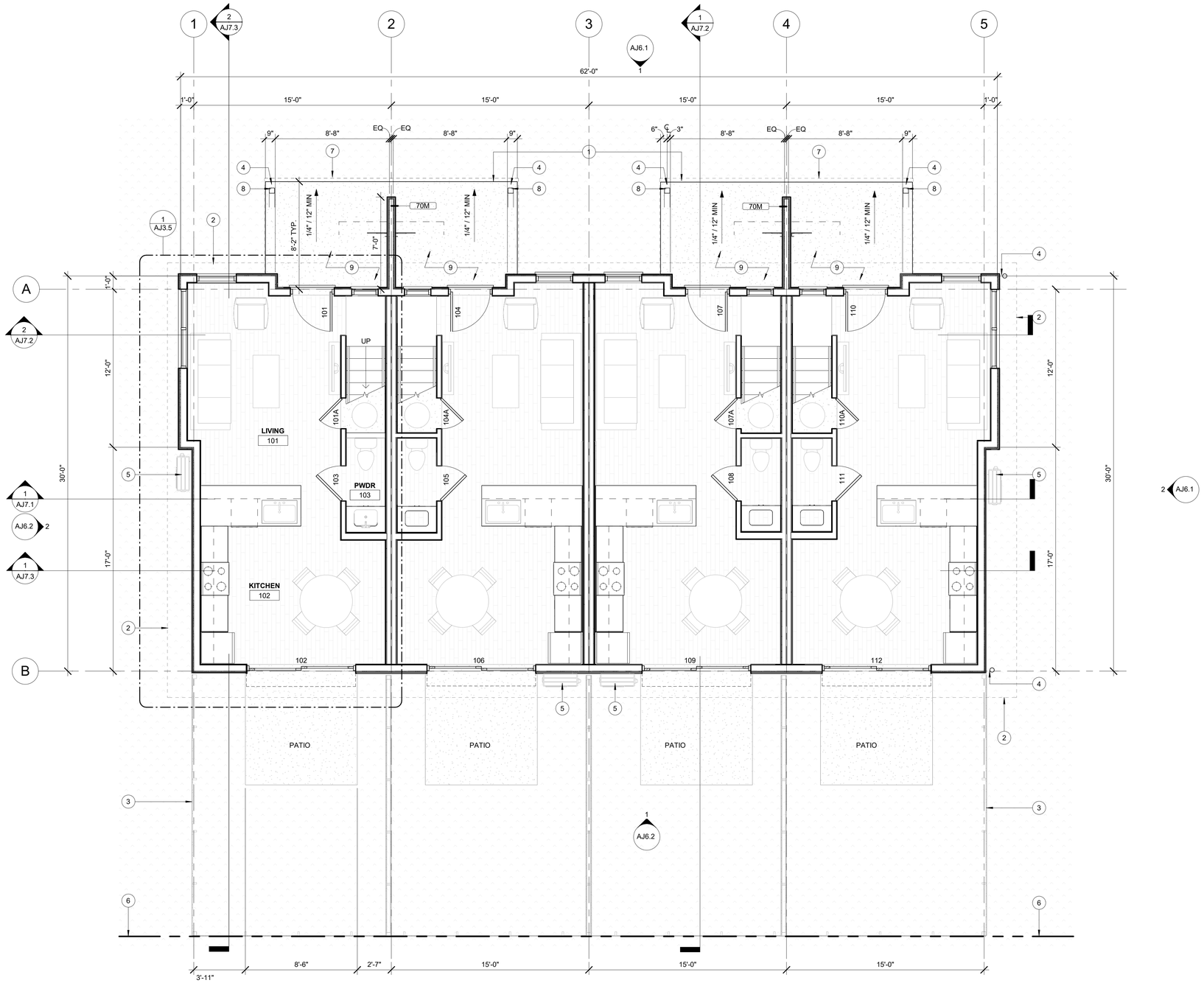

GENERAL NOTES - FLOOR PLANS

A. FLOOR PLAN KEYNOTES APPLY TO SHEETS AJ3.1 - AJ3.2. ALL KEYNOTES MAY NOT OCCUR ON THIS SHEET AND DO NOT APPLY TO ANY OTHER SHEETS EXCEPT THOSE NOTED.

B. ARCHITECTURAL REFERENCE ELEVATION 0" = (SEE CIVIL DRAWINGS FOR ELEVATIONS).

C. SEE A1.1 - A1.3 FOR ASSEMBLIES AND DIMENSION SET POINTS.

D. GRIDS ARE FOR REFERENCE ONLY. CONTRACTOR TO SET CONTROL POINTS FOR LAYOUT.

E. REFERENCE SHEET AJ12.4 FOR DETAILS OF TRANSITIONS BETWEEN FLOORING MATERIALS.

F. FURNITURE, FIXTURES, AND EQUIPMENT SHOWN FOR REFERENCE ONLY.

G. REFERENCE SHEET A11.1 FOR ROOM FINISH INFORMATION.

H. CLEAR DISTANCE AT HINGE SIDE OF ALL DOOR JAMBS ARE TO BE 4" FROM ADJOINING WALL, UNLESS NOTED OTHERWISE.

I. WINDOW OPENING DIMENSIONS SHOWN ARE TO THE ROUGH OPENING. REFER TO SPECIFIC DETAILS FOR REQUIRED CLEARANCES FROM THE ROUGH OPENING TO THE WINDOW UNIT.

KEYNOTES - FLOOR PLANS

1	ALIGN
2	ROOF OVERHANG ABOVE
3	PRIVACY FENCE, SEE LANDSCAPE
4	07 62 00 - DOWNSPOUT
5	22 00 00 - WALL MOUNTED AIR CONDITION UNIT
6	PROPERTY LINE
7	BUILDING CANOPY ABOVE
8	STEEL POST, SEE STRUCTURAL
9	03 30 00 - EXTERIOR CONCRETE PORCH SLAB, REFER TO STRUCTURAL. MINIMUM 1/4" / 12" SLOPE (2%) AT CONCRETE PATIO, FEATHER SLAB AS NECESSARY TO MAINTAIN POSITIVE SLOPE AWAY FROM BUILDING, TYP.

PLAN - LEVEL 1 (1)
SCALE: 1/4" = 1'-0" (24 X 36)
SCALE: 1/8" = 1'-0" (11 X 17)

ksw ARCHITECTS
66 WATER STREET
SUITE 101
ASHLAND, OR
97520
TEL.: 541.488.8200

CONSTRUCTION DOCUMENTS

REGISTERED ARCHITECT
RAYMOND J. KISTLER
3172
ASHLAND, OREGON
STATE OF OREGON

CALDERA OAKS: BUILDING J

BENTELLA LLC
300 CLAY ST.
ASHLAND OR. 97520

REVISIONS

PLAN - LEVEL 1

PROJECT NO.: 25-010
ISSUE DATE: 07.08.2025
SHEET:

AJ3.1

8/15/2025 2:27:05 PM
This document, and the ideas and designs incorporated herein, as an instrument of professional service, is the property of Kistler Small + White Architects and is not to be used, in whole or in part, for any other project without the written authorization of Kistler Small + White Architects.
Copyright© 2025 KSW Architects LLC

8/15/2025 2:27:05 PM

Copywrite 2025 KSW Architects LLC

This document, and the ideas and designs incorporated herein, as an instrument of professional service, is the property of Kistler Small + White Architects and is not to be used, in whole or in part, for any other project without the written authorization of Kistler Small + White Architects.

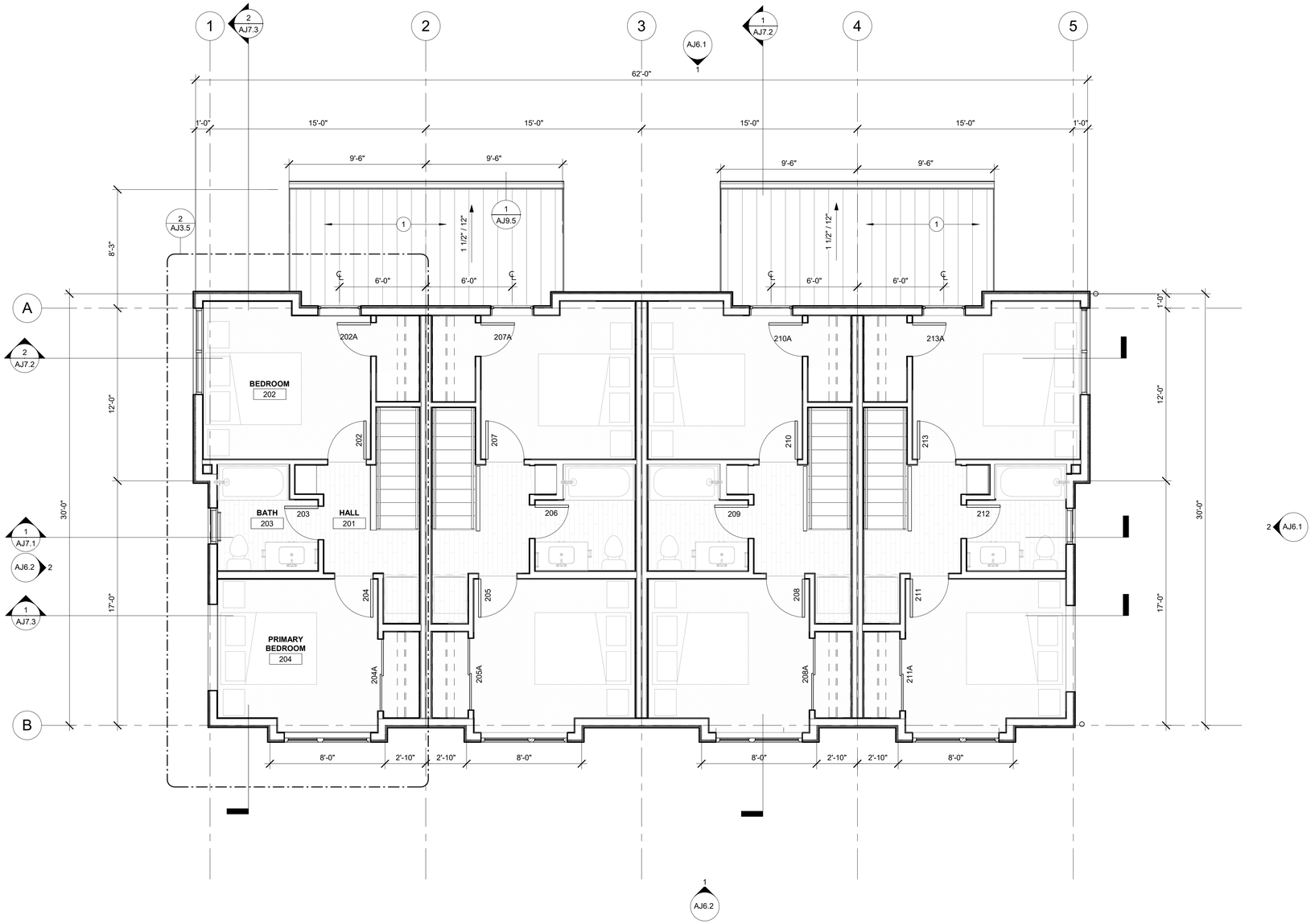

PLAN - LEVEL 2

SCALE: 1/4" = 1'-0" (24 X 36)
SCALE: 1/8" = 1'-0" (11 X 17)

1

GENERAL NOTES - FLOOR PLANS

A. FLOOR PLAN KEYNOTES APPLY TO SHEETS AJ3.1 - AJ3.2. ALL KEYNOTES MAY NOT OCCUR ON THIS SHEET AND DO NOT APPLY TO ANY OTHER SHEETS EXCEPT THOSE NOTED.

B. ARCHITECTURAL REFERENCE ELEVATION 0" = (SEE CIVIL DRAWINGS FOR ELEVATIONS).

C. SEE A1.1 - A1.3 FOR ASSEMBLIES AND DIMENSION SET POINTS.

D. GRIDS ARE FOR REFERENCE ONLY. CONTRACTOR TO SET CONTROL POINTS FOR LAYOUT.

E. REFERENCE SHEET AJ12.4 FOR DETAILS OF TRANSITIONS BETWEEN FLOORING MATERIALS.

F. FURNITURE, FIXTURES, AND EQUIPMENT SHOWN FOR REFERENCE ONLY.

G. REFERENCE SHEET A11.1 FOR ROOM FINISH INFORMATION.

H. CLEAR DISTANCE AT HINGE SIDE OF ALL DOOR JAMBS ARE TO BE 4" FROM ADJOINING WALL, UNLESS NOTED OTHERWISE.

I. WINDOW OPENING DIMENSIONS SHOWN ARE TO THE ROUGH OPENING. REFER TO SPECIFIC DETAILS FOR REQUIRED CLEARANCES FROM THE ROUGH OPENING TO THE WINDOW UNIT.

KEYNOTES - FLOOR PLANS

1	ALIGN
2	ROOF OVERHANG ABOVE
3	PRIVACY FENCE, SEE LANDSCAPE
4	07 62 00 - DOWNSPOUT
5	22 00 00 - WALL MOUNTED AIR CONDITION UNIT
6	PROPERTY LINE
7	BUILDING CANOPY ABOVE
8	STEEL POST, SEE STRUCTURAL
9	03 30 00 - EXTERIOR CONCRETE PORCH SLAB, REFER TO STRUCTURAL. MINIMUM 1/4" / 12" SLOPE (2%) AT CONCRETE PATIO, FEATHER SLAB AS NECESSARY TO MAINTAIN POSITIVE SLOPE AWAY FROM BUILDING, TYP.

ksw ARCHITECTS

66 WATER STREET
SUITE 101
ASHLAND, OR
97520
TEL.: 541.488.8200

CONSTRUCTION DOCUMENTS

REGISTERED ARCHITECT
RAYMOND J. KISTLER
3172
ASHLAND, OREGON
STATE OF OREGON

CALDERA OAKS: BUILDING J

BENTELLA LLC
300 CLAY ST.
ASHLAND OR. 97520

REVISIONS

PLAN - LEVEL 2

PROJECT NO.: 25-010
ISSUE DATE: 07.08.2025
SHEET:

AJ3.2

8/15/2025 2:27:06 PM

Copyright 2025 KSW Architects LLC This document, and the ideas and designs incorporated herein, as an instrument of professional service, is the property of Kistler Small + White Architects and is not to be used, in whole or in part, for any other project without the written authorization of Kistler Small + White Architects.

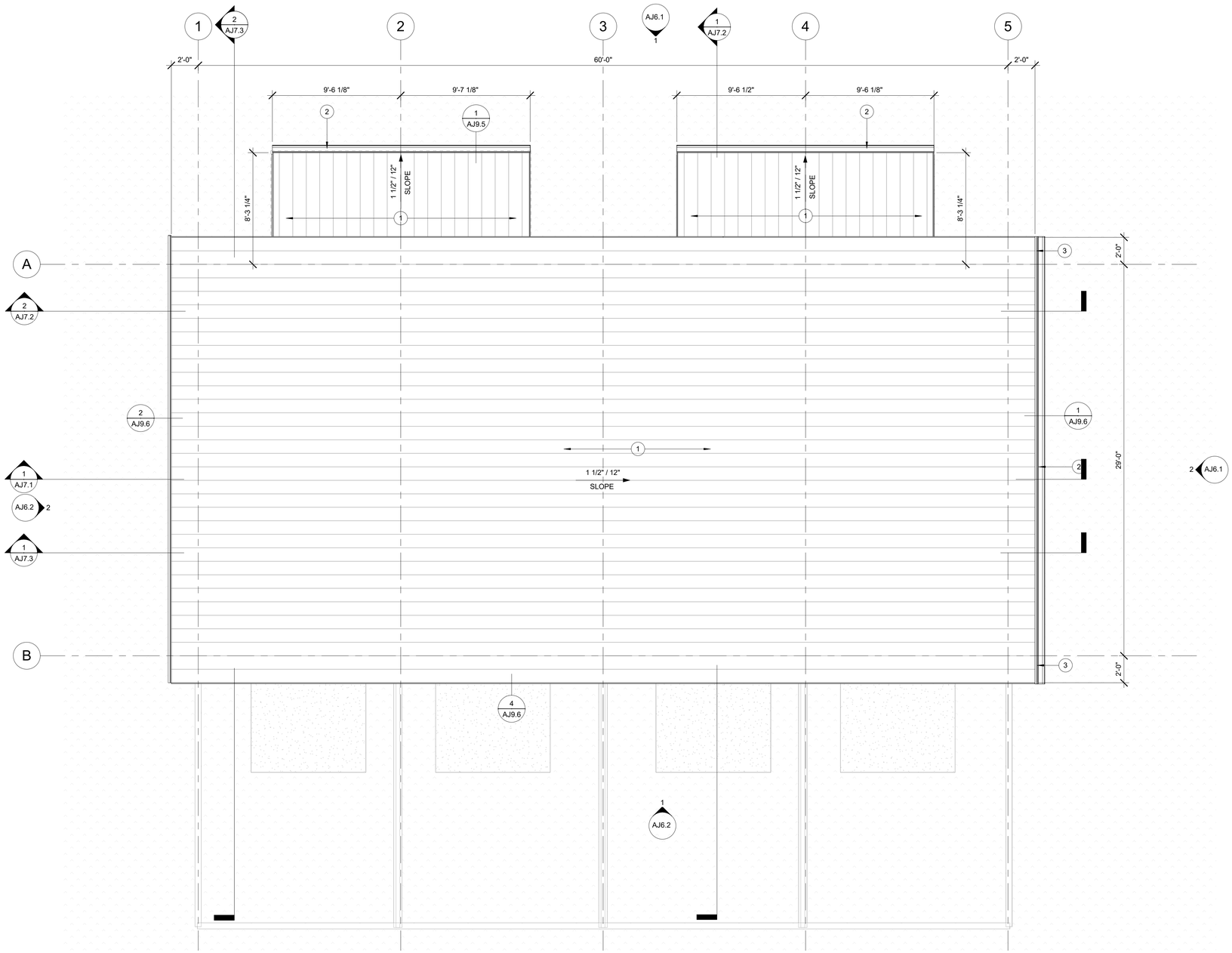

PLAN - ROOF (1)

SCALE: 1/4" = 1'-0" (24 X 36)
SCALE: 1/8" = 1'-0" (11 X 17)

GENERAL NOTES - ROOF PLAN

A. ROOF PLAN KEYNOTES APPLY TO SHEET AC3.1. ALL KEYNOTES MAY NOT OCCUR ON THIS SHEET AND DO NOT APPLY TO ANY OTHER SHEETS EXCEPT THOSE NOTED.

B. ARCHITECTURAL REFERENCE ELEVATION 0" = (SEE CIVIL DRAWINGS FOR ELEVATIONS).

C. SEE A1.1 - A1.3 FOR ASSEMBLIES

D. GRIDS ARE FOR REFERENCE ONLY. CONTRACTOR TO SET CONTROL POINTS FOR LAYOUT.

KEYNOTES - ROOF PLAN

1 07 41 13 - STANDING SEAM METAL ROOF PANELS (MP-1)
2 07 62 00 - GUTTER
3 07 62 00 - DOWNSPOUT

ksw ARCHITECTS
66 WATER STREET
SUITE 101
ASHLAND, OR
97520
TEL.: 541.488.8200

CONSTRUCTION DOCUMENTS

REGISTERED ARCHITECT
RAYMOND J. KISTLER
3172
ASHLAND, OREGON
STATE OF OREGON

CALDERA OAKS: BUILDING J

BENTELLA LLC
300 CLAY ST.
ASHLAND OR. 97520

REVISIONS

ROOF PLAN

PROJECT NO.: 25-010
ISSUE DATE: 07.08.2025
SHEET:

AJ3.3

8/15/2025 2:27:06 PM

Copyright 2025 KSW Architects LLC

This document, and the ideas and designs incorporated herein, as an instrument of professional service, is the property of Kistler Small + White Architects and is not to be used, in whole or in part, for any other project without the written authorization of Kistler Small + White Architects.

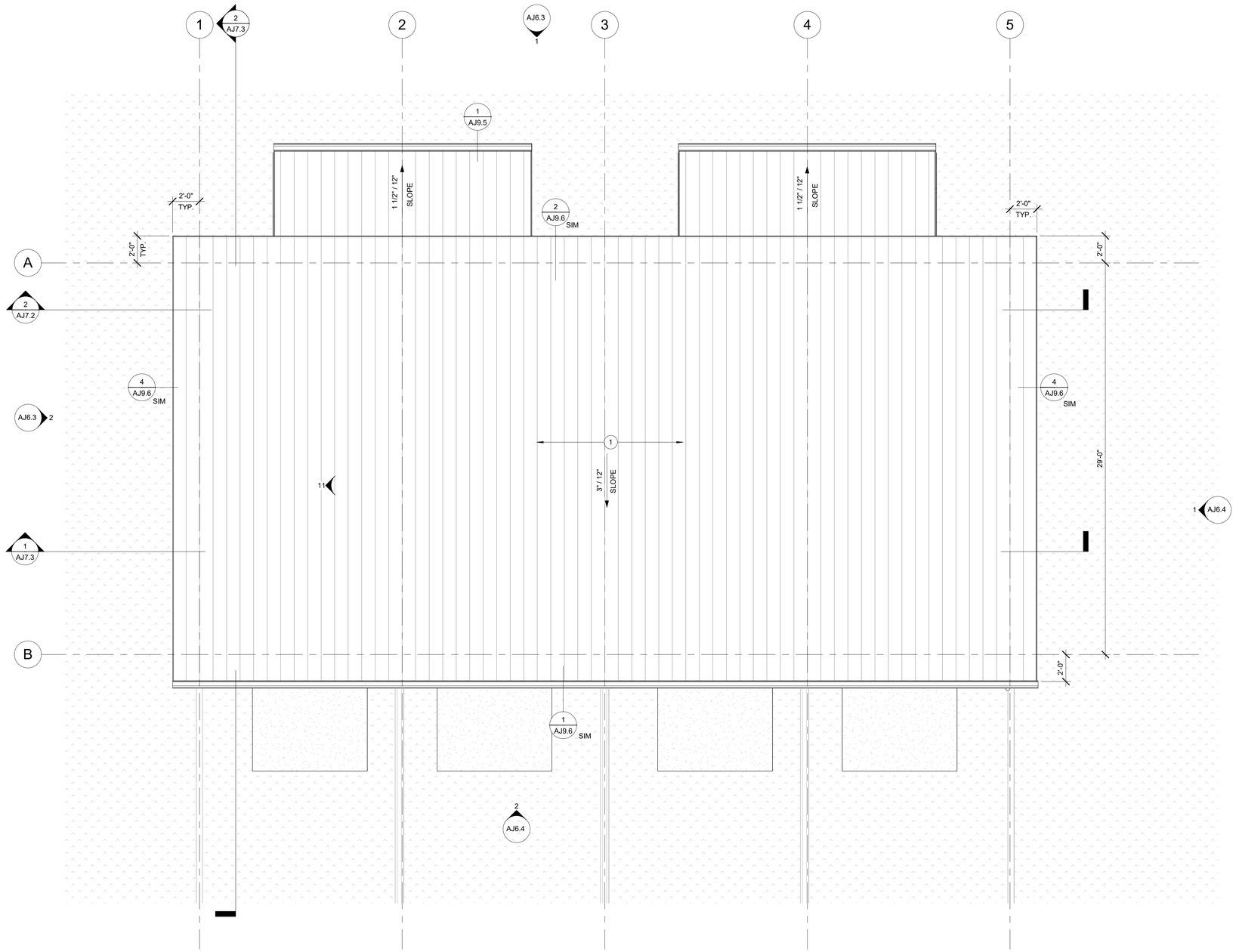

PLAN - ROOF - LOT 25

1

SCALE: 1/4" = 1'-0" (24 X 36)
SCALE: 1/8" = 1'-0" (11 X 17)

GENERAL NOTES - ROOF PLAN

A. ROOF PLAN KEYNOTES APPLY TO SHEET AC3.1. ALL KEYNOTES MAY NOT OCCUR ON THIS SHEET AND DO NOT APPLY TO ANY OTHER SHEETS EXCEPT THOSE NOTED.

B. ARCHITECTURAL REFERENCE ELEVATION 0" = (SEE CIVIL DRAWINGS FOR ELEVATIONS).

C. SEE A1.1 - A1.3 FOR ASSEMBLIES

D. GRIDS ARE FOR REFERENCE ONLY. CONTRACTOR TO SET CONTROL POINTS FOR LAYOUT.

KEYNOTES - ROOF PLAN

1 07 41 13 - STANDING SEAM METAL ROOF PANELS (MP-1)
2 07 62 00 - GUTTER
3 07 62 00 - DOWNSPOUT

ksw ARCHITECTS
66 WATER STREET
SUITE 101
ASHLAND, OR
97520
TEL.: 541.488.8200

CONSTRUCTION DOCUMENTS

REGISTERED ARCHITECT
RAYMOND J. KISTLER
3172
ASHLAND, OREGON
STATE OF OREGON

CALDERA OAKS: BUILDING J

BENTELLA LLC
300 CLAY ST.
ASHLAND OR. 97520

REVISIONS

ROOF PLAN - LOT 25

PROJECT NO.: 25-010
ISSUE DATE: 07.08.2025
SHEET:

AJ3.4

8/15/2025 2:27:07 PM

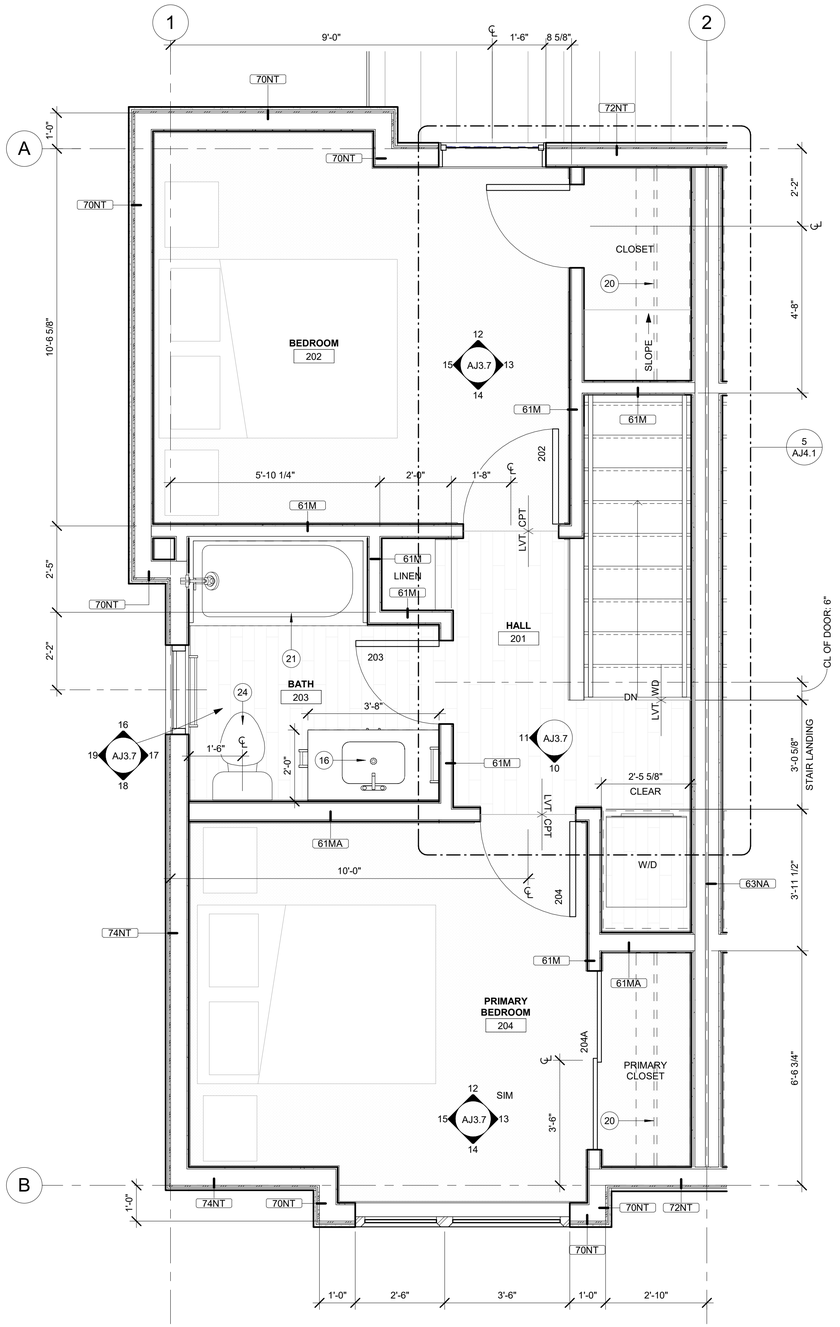

UNIT PLAN - J - LEVEL 2 (2)

SCALE: 1/2" = 1'-0" (24 X 36)
SCALE: 1/4" = 1'-0" (11 X 17)

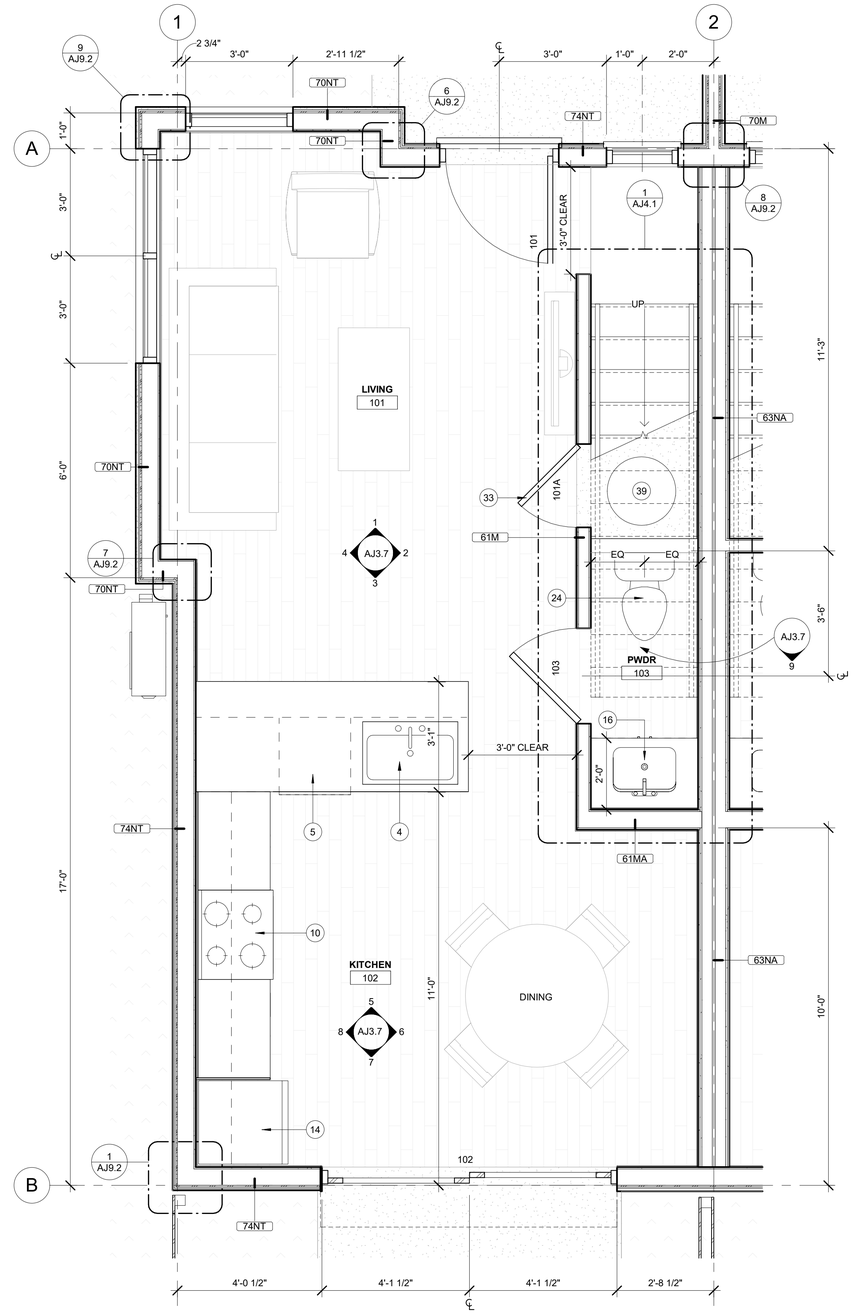

UNIT PLAN - J - LEVEL 1 (1)

SCALE: 1/2" = 1'-0" (24 X 36)
SCALE: 1/4" = 1'-0" (11 X 17)

GENERAL NOTES - UNIT COMPOSITE

A. UNIT COMPOSITE KEYNOTES APPLY TO SHEET AJ3.5 ALL KEYNOTES MAY NOT OCCUR ON THIS SHEET AND DO NOT APPLY TO ANY OTHER SHEETS EXCEPT THOSE NOTED.

B. SEE GENERAL SHEETS FOR ADDITIONAL ACCESSIBILITY INFORMATION IF APPLICABLE.

C. SEE AJ1.1 FOR ASSEMBLIES AND DIMENSION SET POINTS.

D. GRIDS ARE FOR REFERENCE ONLY. CONTRACTOR TO SET CONTROL POINTS FOR LAYOUT.

E. REFERENCE SHEET AJ12.5 FOR DETAILS OF TRANSITIONS BETWEEN FLOORING MATERIALS.

F. FURNITURE, FIXTURES, AND EQUIPMENT SHOWN FOR REFERENCE ONLY.

G. REFERENCE SHEET AJ11.1 FOR ROOM FINISH INFORMATION.

H. CLEAR DISTANCE AT HINGE SIDE OF ALL DOOR JAMBS ARE TO BE 4" FROM ADJOINING WALL, UNLESS NOTED OTHERWISE.

I. WINDOW OPENING DIMENSIONS SHOWN ARE TO THE ROUGH OPENING. REFER TO SPECIFIC DETAILS FOR REQUIRED CLEARANCES FROM THE ROUGH OPENING TO THE WINDOW UNIT.

J. CASEWORK FABRICATION TO BE COORDINATED WITH APPLIANCES.

K. CENTER LIGHT FIXTURES, J BOXES, AND SPRINKLER HEADS ON CEILING/ SOFFIT, U.N.O.

L. ALL CEILING HEIGHTS ARE RELATIVE TO FINISHED FLOOR, U.N.O.

M. ACCESS PANEL LOCATIONS SHALL BE COORDINATED WITH THE ARCHITECT.

N. BACK TO BACK OUTLET BOXES IN DEMISING WALLS ARE NOT ALLOWED. DEMISING WALL PENETRATIONS TO BE LIMITED TO REQUIRED INSTALLATIONS, ALL PENETRATIONS TO BE ACOUSTICALLY SEALED WITH AN OUTLET BOX "PUTTY PAD", OR EQUIVALENT SOUND ATTENUATION MEASURE.

O. BLOCKING IS REQUIRED FOR INSTALLATION OF FUTURE GRAB BARS IN ALL UNIT BATHROOMS. REFER TO GENERAL SHEETS FOR ADDITIONAL UNIT ANSI ACCESS INFORMATION.

KEYNOTES - UNIT COMPOSITE (1)

1 ALIGN
2 06 41 00 - PLASTIC LAMINATE CASEWORK (PLAM-2)
3 KITCHEN FAUCET (PF-10)
4 KITCHEN SINK (PF-11)
5 DISHWASHER (APP-9)
6 06 20 00 PAINTED WALL BASE (B-1)
7 09 21 16 PAINTED GYPSUM WALL BOARD (PT-1)
8 09 30 00 TILE BACKSPLASH (T-4)
9 10 28 00 - FRAMELESS MIRROR (ACC-6)
10 OVEN (APP-8)
11 12 36 00 QUARTZ COUNTERTOP (SURF-3)
12 26 00 00 - WALL-MOUNTED LIGHT, CENTER ABOVE VANITY CABINET
13 MICROWAVE VENT HOOD (APP-10)
14 REFRIGERATOR (APP-7)
15 22 42 00 BATHROOM FAUCET PF-12)
16 22 42 00 UNDERMOUNT BATHROOM SINK (PF-4)
17 12 36 00 QUARTZ COUNTERTOP (SURF-4)
18 12 36 00 QUARTZ BACKSPLASH (SURF-4)
19 WASHER (APP-11)
20 DOUBLE CLOSET ROD AND SHELF.
21 22 42 00 TUB / SHOWER SURROUND (PF-13)
22 22 42 00 TUB / SHOWER TRIM KIT (PF-8)
23 10 28 00 - HAND TOWEL BAR, PROVIDE BLOCKING (ACC-3)
24 22 42 00 TOILET (PF-5)
26 06 41 00 BUILT IN SHELVING, PROVIDE BLOCKING (PLAM-1)
28 06 41 00 - PLASTIC LAMINATE CASEWORK UPPERS (PLAM-3)
29 06 41 00 - PLASTIC LAMINATE CASEWORK FRIDGE SURROUND (PLAM-2)
30 06 41 00 - PLASTIC LAMINATE CASEWORK END PANEL (PLAM-2)
31 DECORATIVE WALL SCONCE (L-7)
32 DECORATIVE PENDANT (L-6)
33 ACCESS DOOR: 2'-4" X 4'-0", TYP.
34 HVAC MINI-SPLIT INTERIOR SUPPLY UNIT
35 VAULTED CEILING @ B.O.S. - ADD ALT. DEDUCT: FLAT HARD LID CEILING TO MATCH OTHERS, TYP AT ALL TYPE J UNITS.
36 07 46 23 - 6" T&G ACETYLATED WOOD SOFFIT, MILL STAINED & FIELD COATED (WD-1)
37 PROVIDE BLOCKING FOR GRAB BAR INSTALLATION
38 10 28 00 - TOWEL BAR, PROVIDE BLOCKING, (ACC-2)
39 WATER HEATER
40 08 31 00 - 22.5" X 30" ATTIC ACCESS HATCH W/ LOCKABLE PANEL , PROVIDE CLEARANCE BELOW HINGE SIDE. ORIENT ACCESS HATCH SUCH THAT THE SHORTER DIMENTION CAN FIT BETWEEN ROOF TRUSSES. TYP AT EACH UNIT
41 10 28 00 - TOILET TISSUE HOLDER, PROVIDE BLOCKING, (ACC-4)
42 07 46 46 - FIBER CEMENT SOFFIT PANELS, PAINTED (FC-1)
43 07 46 23 - 2" CONTINUOUS SOFFIT VENT (TAMLYN VPCA2-BK), BLACK FINISH

ksw ARCHITECTS
66 WATER STREET
SUITE 101
ASHLAND, OR
97520
TEL.: 541.488.8200

CONSTRUCTION DOCUMENTS

REGISTERED ARCHITECT
RAYMOND J. KISTLER
3172
ASHLAND, OREGON
STATE OF OREGON

CALDERA OAKS: BUILDING J

BENTELLA LLC
300 CLAY ST.
ASHLAND OR. 97520

REVISIONS

UNIT COMPOSITE - UNIT J FLOOR PLANS

PROJECT NO.: 25-010
ISSUE DATE: 07.08.2025
SHEET:

AJ3.5

This document, and the ideas and designs incorporated herein, as an instrument of professional service, is the property of Kistler Small + White Architects and is not to be used, in whole or in part, for any other project without the written authorization of Kistler Small + White Architects.

Copywrite 2025 KSW Architects LLC

8/15/2025 2:27:08 PM

This document, and the ideas and designs incorporated herein, as an instrument of professional service, is the property of Kistler Small + White Architects and is not to be used, in whole or in part, for any other project without the written authorization of Kistler Small + White Architects.

Copyright 2025 KSW Architects LLC

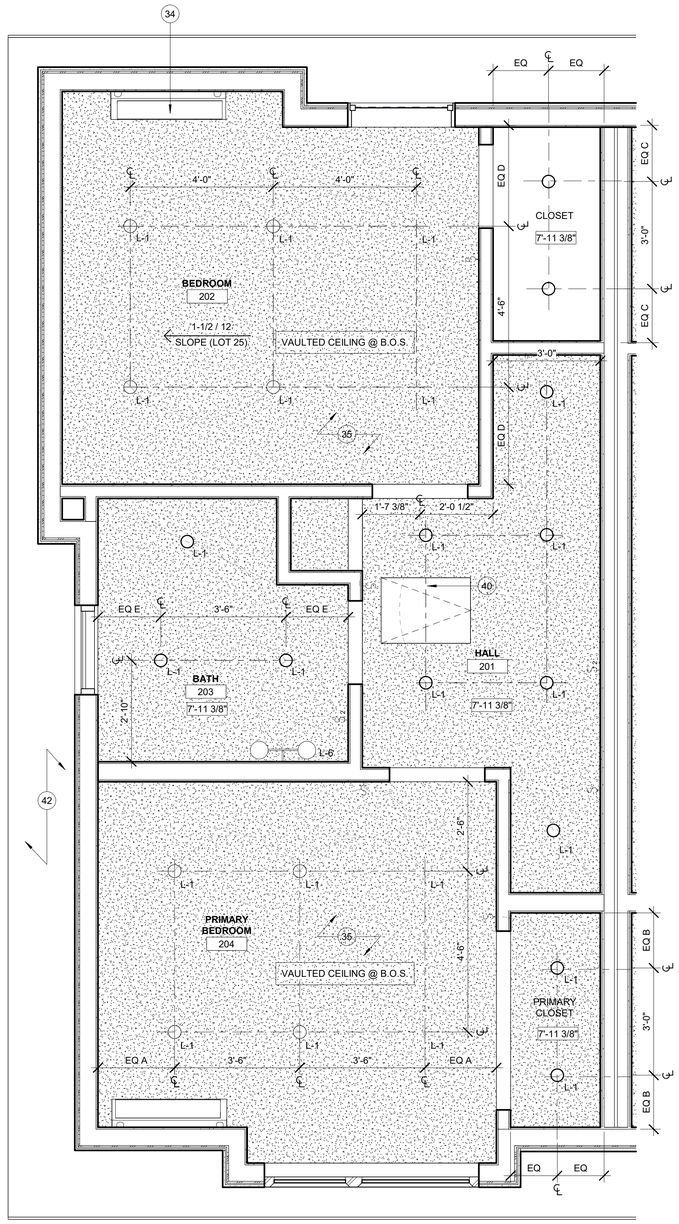

UNIT RCP - J - LVL 2 (2)

SCALE: 1/2" = 1'-0" (24 X 36)
SCALE: 1/4" = 1'-0" (11 X 17)

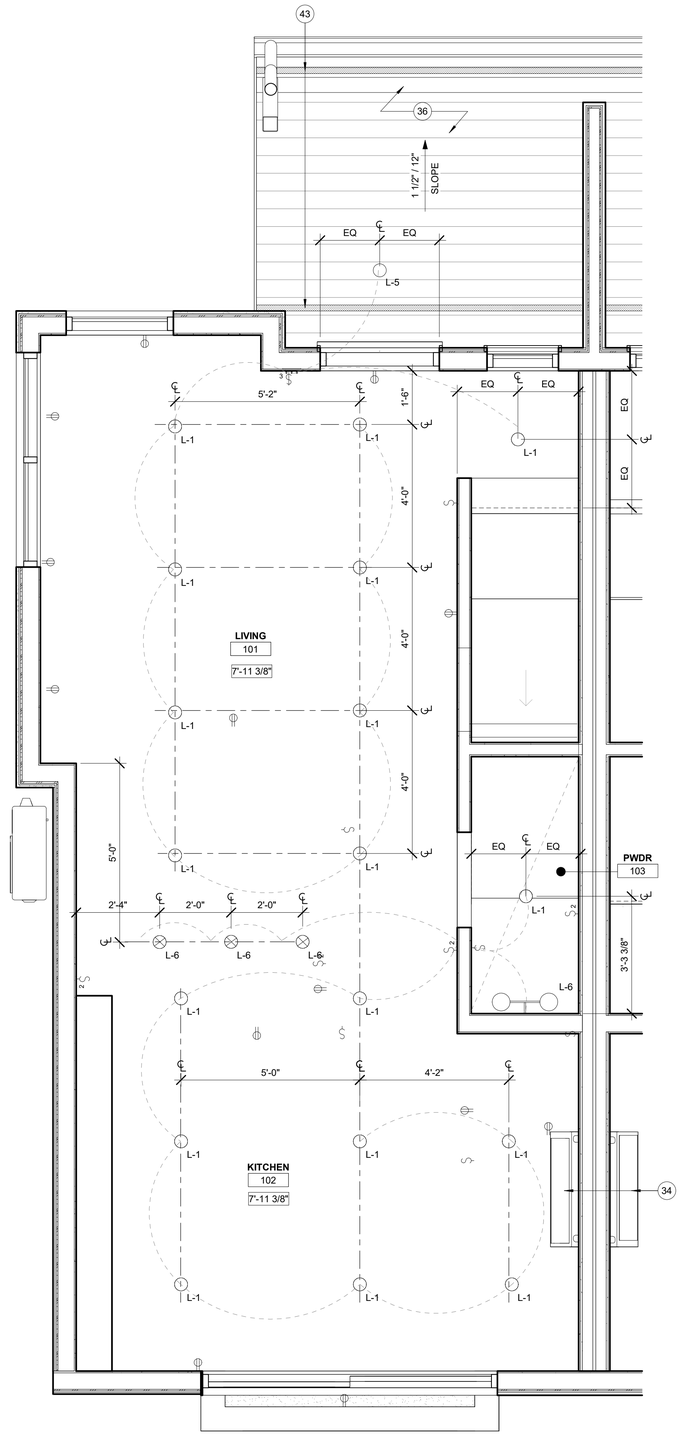

UNIT RCP - J - LVL 1 (1)

SCALE: 1/2" = 1'-0" (24 X 36)
SCALE: 1/4" = 1'-0" (11 X 17)

GENERAL NOTES - UNIT COMPOSITE

A. UNIT COMPOSITE KEYNOTES APPLY TO SHEET AJ3.5 ALL KEYNOTES MAY NOT OCCUR ON THIS SHEET AND DO NOT APPLY TO ANY OTHER SHEETS EXCEPT THOSE NOTED.

B. SEE GENERAL SHEETS FOR ADDITIONAL ACCESSIBILITY INFORMATION IF APPLICABLE.

C. SEE AJ1.1 FOR ASSEMBLIES AND DIMENSION SET POINTS.

D. GRIDS ARE FOR REFERENCE ONLY. CONTRACTOR TO SET CONTROL POINTS FOR LAYOUT.

E. REFERENCE SHEET AJ12.5 FOR DETAILS OF TRANSITIONS BETWEEN FLOORING MATERIALS.

F. FURNITURE, FIXTURES, AND EQUIPMENT SHOWN FOR REFERENCE ONLY.

G. REFERENCE SHEET AJ11.1 FOR ROOM FINISH INFORMATION.

H. CLEAR DISTANCE AT HINGE SIDE OF ALL DOOR JAMBS ARE TO BE 4" FROM ADJOINING WALL, UNLESS NOTED OTHERWISE.

I. WINDOW OPENING DIMENSIONS SHOWN ARE TO THE ROUGH OPENING. REFER TO SPECIFIC DETAILS FOR REQUIRED CLEARANCES FROM THE ROUGH OPENING TO THE WINDOW UNIT.

J. CASEWORK FABRICATION TO BE COORDINATED WITH APPLIANCES.

K. CENTER LIGHT FIXTURES, J BOXES, AND SPRINKLER HEADS ON CEILING/ SOFFIT, U.N.O.

L. ALL CEILING HEIGHTS ARE RELATIVE TO FINISHED FLOOR, U.N.O.

M. ACCESS PANEL LOCATIONS SHALL BE COORDINATED WITH THE ARCHITECT.

N. BACK TO BACK OUTLET BOXES IN DEMISING WALLS ARE NOT ALLOWED. DEMISING WALL PENETRATIONS TO BE LIMITED TO REQUIRED INSTALLATIONS, ALL PENETRATIONS TO BE ACOUSTICALLY SEALED WITH AN OUTLET BOX "PUTTY PAD", OR EQUIVALENT SOUND ATTENUATION MEASURE.

O. BLOCKING IS REQUIRED FOR INSTALLATION OF FUTURE GRAB BARS IN ALL UNIT BATHROOMS. REFER TO GENERAL SHEETS FOR ADDITIONAL UNIT ANSI ACCESS INFORMATION.

LEGEND - RCP

NOTE: THIS PROJECT MAY NOT CONTAIN ALL ELEMENTS SHOWN ON THIS LEGEND.

- HVAC RETURN
- HVAC SUPPLY
- ACCESS PANEL
- J-BOX
- RECESSED LIGHT
- RECESSED SHOWER LIGHT W/ FAN
- SURFACE MOUNTED LIGHT
- CEILING FAN
- SURFACE MOUNTED LINEAR
- STRIP FLOURESCENT
- STRIP COVE LIGHT
- SUSPENDED LINEAR
- UNDERCABINET LIGHT
- PENDANT LIGHT
- DROPPED CEILING
- XX'-XX" — CEILING HEIGHT TAG
- B.O.A. — BOTTOM OF ASSEMBLY
- WALL SCONCE LIGHT

KEYNOTES - UNIT COMPOSITE

1 ALIGN
2 06 41 00 - PLASTIC LAMINATE CASEWORK (PLAM-2)
3 KITCHEN FAUCET (PF-10)
4 KITCHEN SINK (PF-11)
5 DISHWASHER (APP-9)
6 06 20 00 PAINTED WALL BASE (B-1)
7 09 21 16 PAINTED GYPSUM WALL BOARD (PT-1)
8 09 30 00 TILE BACKSPLASH (T-4)
9 10 28 00 - FRAMELESS MIRROR (ACC-6)
10 OVEN (APP-8)
11 12 36 00 QUARTZ COUNTERTOP (SURF-3)
12 26 00 00 - WALL-MOUNTED LIGHT, CENTER ABOVE VANITY CABINET
13 MICROWAVE VENT HOOD (APP-10)
14 REFRIGERATOR (APP-7)
15 22 42 00 BATHROOM FAUCET PF-12)
16 22 42 00 UNDERMOUNT BATHROOM SINK (PF-4)
17 12 36 00 QUARTZ COUNTERTOP (SURF-4)
18 12 36 00 QUARTZ BACKSPLASH (SURF-4)
19 WASHER (APP-11)
20 DOUBLE CLOSET ROD AND SHELF.
21 22 42 00 TUB / SHOWER SURROUND (PF-13)
22 22 42 00 TUB / SHOWER TRIM KIT (PF-8)
23 10 28 00 - HAND TOWEL BAR, PROVIDE BLOCKING (ACC-3)
24 22 42 00 TOILET (PF-5)
26 06 41 00 BUILT IN SHELVING, PROVIDE BLOCKING (PLAM-1)
28 06 41 00 - PLASTIC LAMINATE CASEWORK UPPERS (PLAM-3)
29 06 41 00 - PLASTIC LAMINATE CASEWORK FRIDGE SURROUND (PLAM-2)
30 06 41 00 - PLASTIC LAMINATE CASEWORK END PANEL (PLAM-2)
31 DECORATIVE WALL SCONCE (L-7)
32 DECORATIVE PENDANT (L-6)
33 ACCESS DOOR: 2'-4" X 4'-0", TYP.
34 HVAC MINI-SPLIT INTERIOR SUPPLY UNIT
35 VAULTED CEILING @ B.O.S. - ADD ALT. DEDUCT: FLAT HARD LID CEILING TO MATCH OTHERS, TYP AT ALL TYPE J UNITS.
36 07 46 23 - 6" T&G ACETYLATED WOOD SOFFIT, MILL STAINED & FIELD COATED (WD-1)
37 PROVIDE BLOCKING FOR GRAB BAR INSTALLATION
38 10 28 00 - TOWEL BAR, PROVIDE BLOCKING, (ACC-2)
39 WATER HEATER
40 08 31 00 - 22.5" X 30" ATTIC ACCESS HATCH W/ LOCKABLE PANEL , PROVIDE CLEARANCE BELOW HINGE SIDE. ORIENT ACCESS HATCH SUCH THAT THE SHORTER DIMENTION CAN FIT BETWEEN ROOF TRUSSES. TYP AT EACH UNIT
41 10 28 00 - TOILET TISSUE HOLDER, PROVIDE BLOCKING, (ACC-4)
42 07 46 46 - FIBER CEMENT SOFFIT PANELS, PAINTED (FC-1)
43 07 46 23 - 2" CONTINUOUS SOFFIT VENT (TAMLYN VPCA2-BK), BLACK FINISH

ksw ARCHITECTS
66 WATER STREET
SUITE 101
ASHLAND, OR
97520
TEL.: 541.488.8200

CONSTRUCTION DOCUMENTS

REGISTERED ARCHITECT
RAYMOND J. KISTLER
3172
ASHLAND, OREGON
STATE OF OREGON

CALDERA OAKS: BUILDING J

BENTELLA LLC
300 CLAY ST.
ASHLAND OR. 97520

REVISIONS

UNIT COMPOSITE - UNIT J RCPS

PROJECT NO.: 25-010
ISSUE DATE: 07.08.2025
SHEET:

AJ3.6

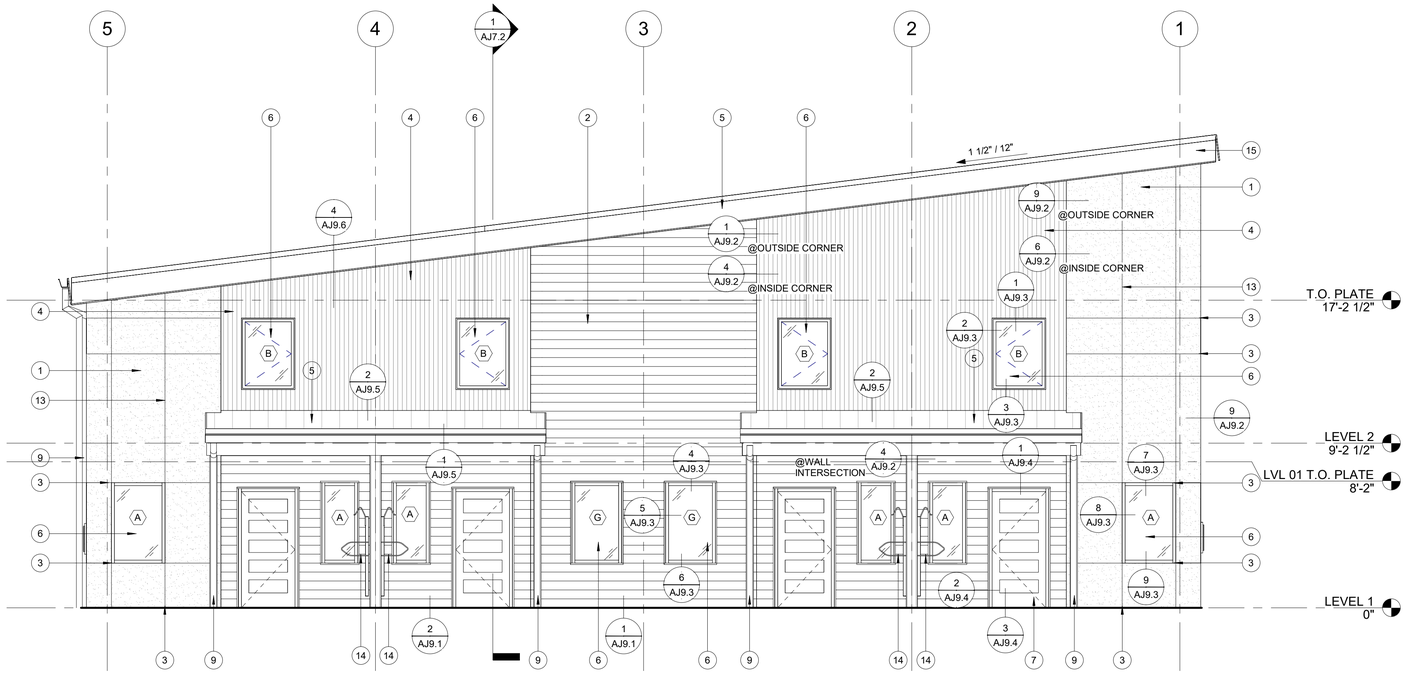

EXTERIOR ELEVATION - EAST (1)

SCALE: 1/4" = 1'-0" (24 X 36)
SCALE: 1/8" = 1'-0" (11 X 17)

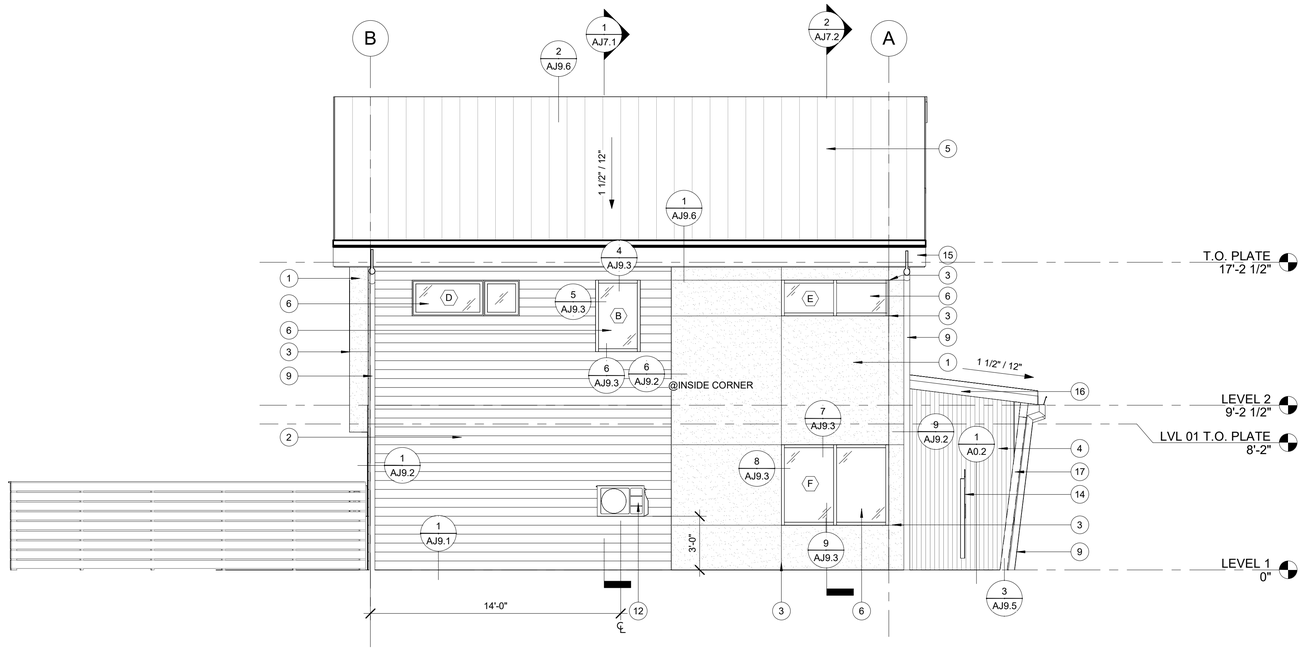

EXTERIOR ELEVATION - SOUTH (2)

SCALE: 1/4" = 1'-0" (24 X 36)
SCALE: 1/8" = 1'-0" (11 X 17)

GENERAL NOTES - EXT ELEVATIONS

A. ELEVATION KEYNOTES APPLY TO SHEETS AJ6.1 - AJ6.4. ALL KEYNOTES MAY NOT OCCUR ON THIS SHEET AND DO NOT APPLY TO ANY OTHER SHEETS EXCEPT THOSE NOTED.

B. SEE AJ1.1 FOR WALL ASSEMBLIES

C. GRIDS ARE FOR REFERENCE ONLY. CONTRACTOR TO SET CONTROL POINTS FOR LAYOUT.

KEYNOTES - EXTERIOR ELEVATIONS

1 09 24 00 - PORTLAND CEMENT PLASTER (STUCCO) WHITE
2 07 46 23 - T&G ACETYLATED WOOD SIDING, MILL STAINED & FIELD COATED. 6" HORIZONTALLY ORIENTED (WD-1)
3 ALIGN CONTROL JOINTS WITH WINDOW OPENINGS
4 07 42 13 - CORRUGATED METAL WALL PANELS (MP-2)
5 07 41 13 - STANDING SEAM METAL ROOF PANELS (MP-1)
6 08 53 00 - VINYL WINDOWS. BLACK EXTERIOR WHITE INTERIOR. WDW-1
7 08 16 13 - FIBERGLASS ENTRY DOOR
9 07 62 00 - METAL DOWNSPOUT FINISHED TO MATCH ROOF
12 23 00 00 - OUTDOOR AIR CONDITIONING UNIT. MOUNT TO WALL PER MANUFACTURER'S RECCOMENDATION.
13 1/4" STUCCO CONTROL JOINTS
14 WALL MOUNTED BIKE LOCK, INSTALL BACKING PER MANUFACTURER SPECS.
15 07 46 46 - 1X16 FIBER CEMENT FASCIA, WHITE, (FC-1)
16 07 46 46 - 1X10 FIBER CEMENT FASCIA, WHITE, (FC-1)
17 05 12 00 - STEEL HSS COLUMN, PER STRUCTURAL, BLACK

ksw ARCHITECTS
66 WATER STREET
SUITE 101
ASHLAND, OR
97520
TEL.: 541.488.8200

CONSTRUCTION DOCUMENTS

REGISTERED ARCHITECT
RAYMOND J. KISTLER
3172
ASHLAND, OREGON
STATE OF OREGON

CALDERA OAKS: BUILDING J

BENTELLA LLC
300 CLAY ST.
ASHLAND OR. 97520

REVISIONS

EXTERIOR ELEVATIONS

PROJECT NO.: 25-010
ISSUE DATE: 07.08.2025
SHEET:

AJ6.1

8/15/2025 2:27:12 PM
This document, and the ideas and designs incorporated herein, as an instrument of professional service, is the property of Kistler Small + White Architects and is not to be used, in whole or in part, for any other project without the written authorization of Kistler Small + White Architects.
Copywrite 2025 KSW Architects LLC

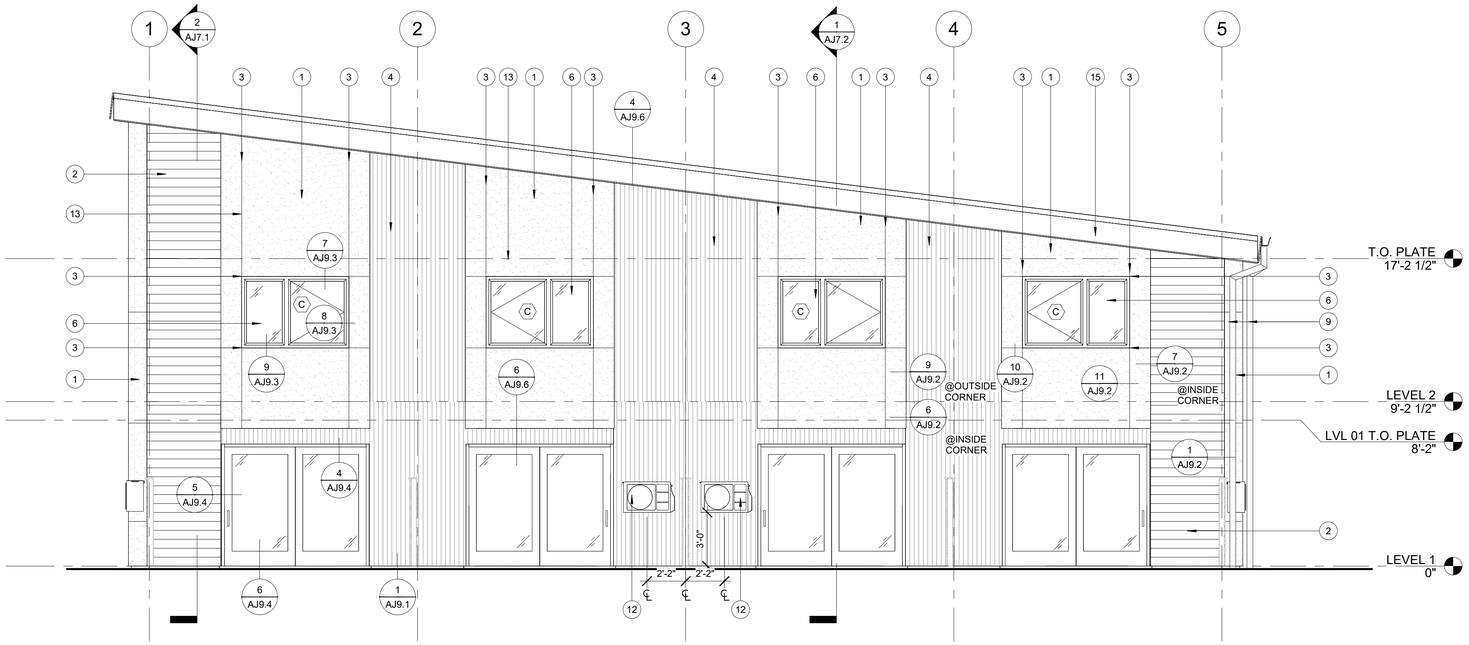

EXTERIOR ELEVATION - WEST (1)

SCALE: 1/4" = 1'-0" (24 X 36)
SCALE: 1/8" = 1'-0" (11 X 17)

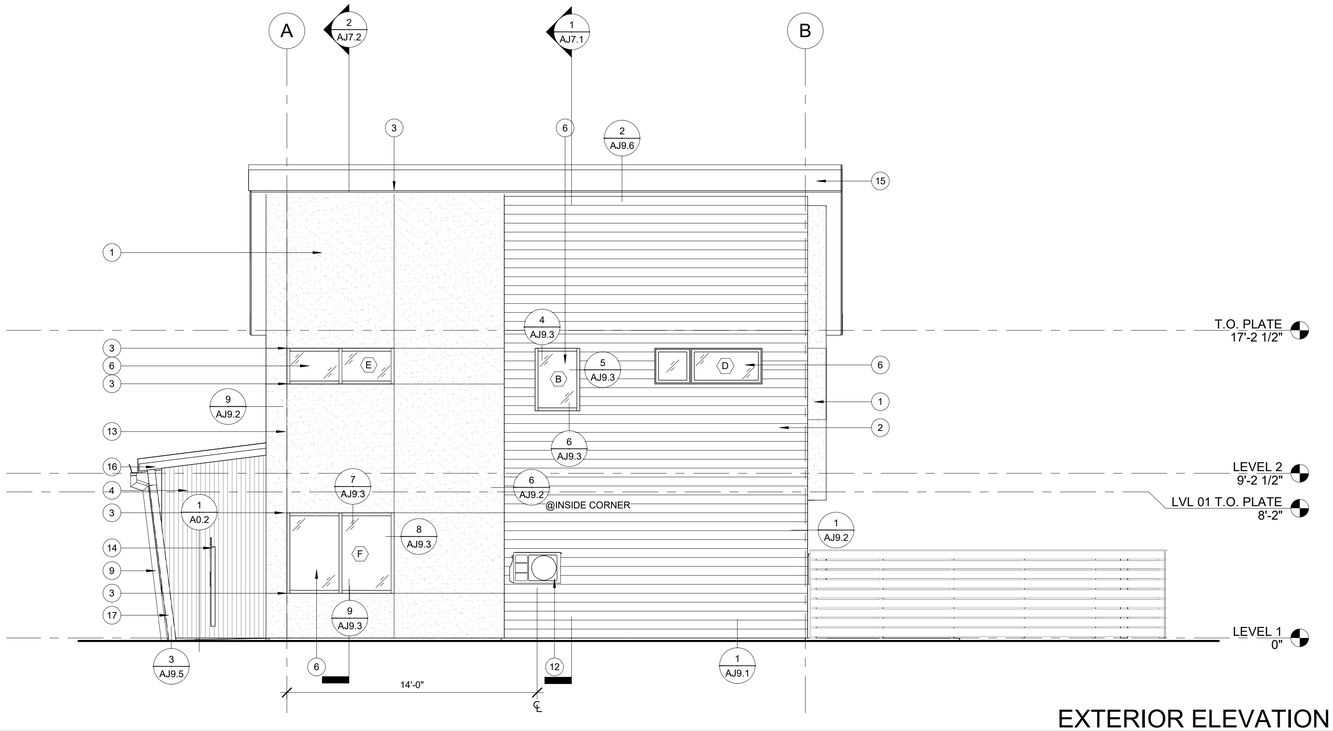

EXTERIOR ELEVATION - NORTH (2)

SCALE: 1/4" = 1'-0" (24 X 36)
SCALE: 1/8" = 1'-0" (11 X 17)

GENERAL NOTES - EXT ELEVATIONS

A. ELEVATION KEYNOTES APPLY TO SHEETS AJ6.1 - AJ6.4. ALL KEYNOTES MAY NOT OCCUR ON THIS SHEET AND DO NOT APPLY TO ANY OTHER SHEETS EXCEPT THOSE NOTED.

B. SEE AJ1.1 FOR WALL ASSEMBLIES

C. GRIDS ARE FOR REFERENCE ONLY. CONTRACTOR TO SET CONTROL POINTS FOR LAYOUT.

KEYNOTES - EXTERIOR ELEVATIONS

1 09 24 00 - PORTLAND CEMENT PLASTER (STUCCO) WHITE
2 07 46 23 - T&G ACETYLATED WOOD SIDING, MILL STAINED & FIELD COATED. 6" HORIZONTALLY ORIENTED (WD-1)
3 ALIGN CONTROL JOINTS WITH WINDOW OPENINGS
4 07 42 13 - CORRUGATED METAL WALL PANELS (MP-2)
5 07 41 13 - STANDING SEAM METAL ROOF PANELS (MP-1)
6 08 53 00 - VINYL WINDOWS. BLACK EXTERIOR WHITE INTERIOR. WDW-1
7 08 16 13 - FIBERGLASS ENTRY DOOR
9 07 62 00 - METAL DOWNSPOUT FINISHED TO MATCH ROOF
12 23 00 00 - OUTDOOR AIR CONDITIONING UNIT. MOUNT TO WALL PER MANUFACTURER'S RECCOMENDATION.
13 1/4" STUCCO CONTROL JOINTS
14 WALL MOUNTED BIKE LOCK, INSTALL BACKING PER MANUFACTURER SPECS.
15 07 46 46 - 1X16 FIBER CEMENT FASCIA, WHITE, (FC-1)
16 07 46 46 - 1X10 FIBER CEMENT FASCIA, WHITE, (FC-1)
17 05 12 00 - STEEL HSS COLUMN, PER STRUCTURAL, BLACK

ksw ARCHITECTS
66 WATER STREET
SUITE 101
ASHLAND, OR
97520
TEL.: 541.488.8200

CONSTRUCTION DOCUMENTS

REGISTERED ARCHITECT
RAYMOND J. KISTLER
3172
ASHLAND, OREGON
STATE OF OREGON

CALDERA OAKS: BUILDING J

BENTELLA LLC
300 CLAY ST.
ASHLAND OR. 97520

REVISIONS

EXTERIOR ELEVATIONS

PROJECT NO.: 25-010
ISSUE DATE: 07.08.2025
SHEET:

AJ6.2

8/15/2025 2:27:13 PM
This document, and the ideas and designs incorporated herein, as an instrument of professional service, is the property of Kistler Small + White Architects and is not to be used, in whole or in part, for any other project without the written authorization of Kistler Small + White Architects.
Copywrite 2025 KSW Architects LLC

*NOTE: REFER TO AJ6.1 AND AJ6.2 FOR NOTES, DIMENSIONS AND DETAIL REFERENCES

EXTERIOR ELEVATION - SOUTH - LOT 25 (1)

SCALE: 1/4" = 1'-0" (24 X 36)
SCALE: 1/8" = 1'-0" (11 X 17)

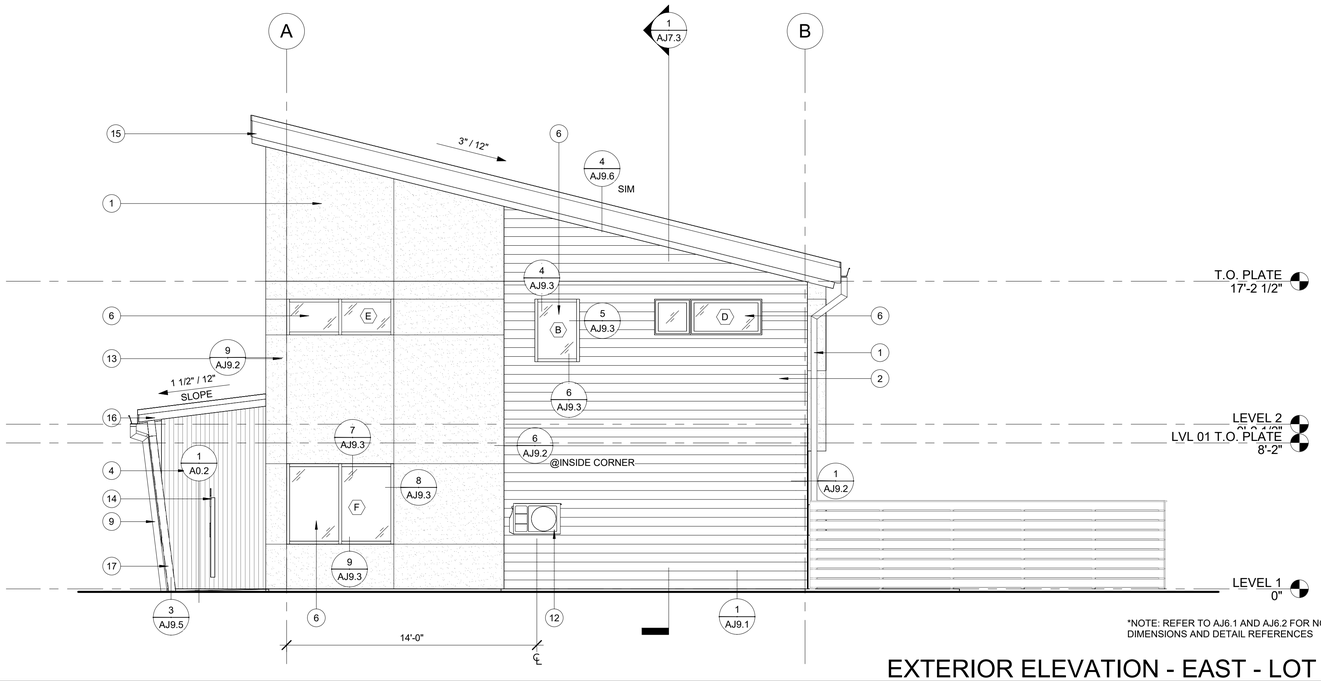

*NOTE: REFER TO AJ6.1 AND AJ6.2 FOR NOTES, DIMENSIONS AND DETAIL REFERENCES

EXTERIOR ELEVATION - EAST - LOT 25 (2)

SCALE: 1/4" = 1'-0" (24 X 36)
SCALE: 1/8" = 1'-0" (11 X 17)

GENERAL NOTES - EXT ELEVATIONS

A. ELEVATION KEYNOTES APPLY TO SHEETS AJ6.1 - AJ6.4. ALL KEYNOTES MAY NOT OCCUR ON THIS SHEET AND DO NOT APPLY TO ANY OTHER SHEETS EXCEPT THOSE NOTED.

B. SEE AJ1.1 FOR WALL ASSEMBLIES

C. GRIDS ARE FOR REFERENCE ONLY. CONTRACTOR TO SET CONTROL POINTS FOR LAYOUT.

KEYNOTES - EXTERIOR ELEVATIONS

1 09 24 00 - PORTLAND CEMENT PLASTER (STUCCO) WHITE
2 07 46 23 - T&G ACETYLATED WOOD SIDING, MILL STAINED & FIELD COATED. 6" HORIZONTALLY ORIENTED (WD-1)
3 ALIGN CONTROL JOINTS WITH WINDOW OPENINGS
4 07 42 13 - CORRUGATED METAL WALL PANELS (MP-2)
5 07 41 13 - STANDING SEAM METAL ROOF PANELS (MP-1)
6 08 53 00 - VINYL WINDOWS. BLACK EXTERIOR WHITE INTERIOR. WDW-1
7 08 16 13 - FIBERGLASS ENTRY DOOR
9 07 62 00 - METAL DOWNSPOUT FINISHED TO MATCH ROOF
12 23 00 00 - OUTDOOR AIR CONDITIONING UNIT. MOUNT TO WALL PER MANUFACTURER'S RECCOMENDATION.
13 1/4" STUCCO CONTROL JOINTS
14 WALL MOUNTED BIKE LOCK, INSTALL BACKING PER MANUFACTURER SPECS.
15 07 46 46 - 1X16 FIBER CEMENT FASCIA, WHITE, (FC-1)
16 07 46 46 - 1X10 FIBER CEMENT FASCIA, WHITE, (FC-1)
17 05 12 00 - STEEL HSS COLUMN, PER STRUCTURAL, BLACK

ksw ARCHITECTS
66 WATER STREET
SUITE 101
ASHLAND, OR
97520
TEL.: 541.488.8200

CONSTRUCTION DOCUMENTS

REGISTERED ARCHITECT
RAYMOND J. KISTLER
3172
ASHLAND, OREGON
STATE OF OREGON

CALDERA OAKS: BUILDING J

BENTELLA LLC
300 CLAY ST.
ASHLAND OR. 97520

REVISIONS

EXTERIOR ELEVATIONS - LOT 25

PROJECT NO.: 25-010
ISSUE DATE: 07.08.2025
SHEET:

AJ6.3

9/19/2025 5:18:07 PM
This document, and the ideas and designs incorporated herein, as an instrument of professional service, is the property of Kistler Small + White Architects and is not to be used, in whole or in part, for any other project without the written authorization of Kistler Small + White Architects.
Copywrite 2025 KSW Architects LLC

9/19/2025 5:18:57 PM

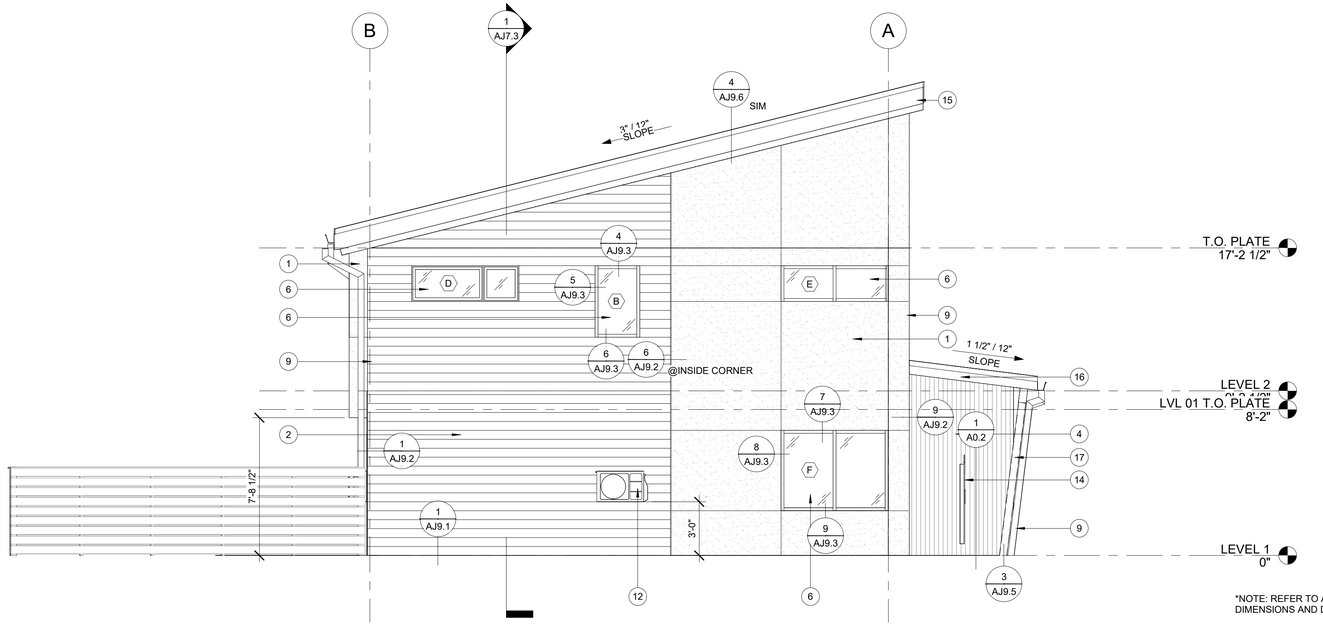

*NOTE: REFER TO AJ6.1 AND AJ6.2 FOR NOTES, DIMENSIONS AND DETAIL REFERENCES

EXTERIOR ELEVATION - WEST - LOT 25 (1)

SCALE: 1/4" = 1'-0" (24 X 36)
SCALE: 1/8" = 1'-0" (11 X 17)

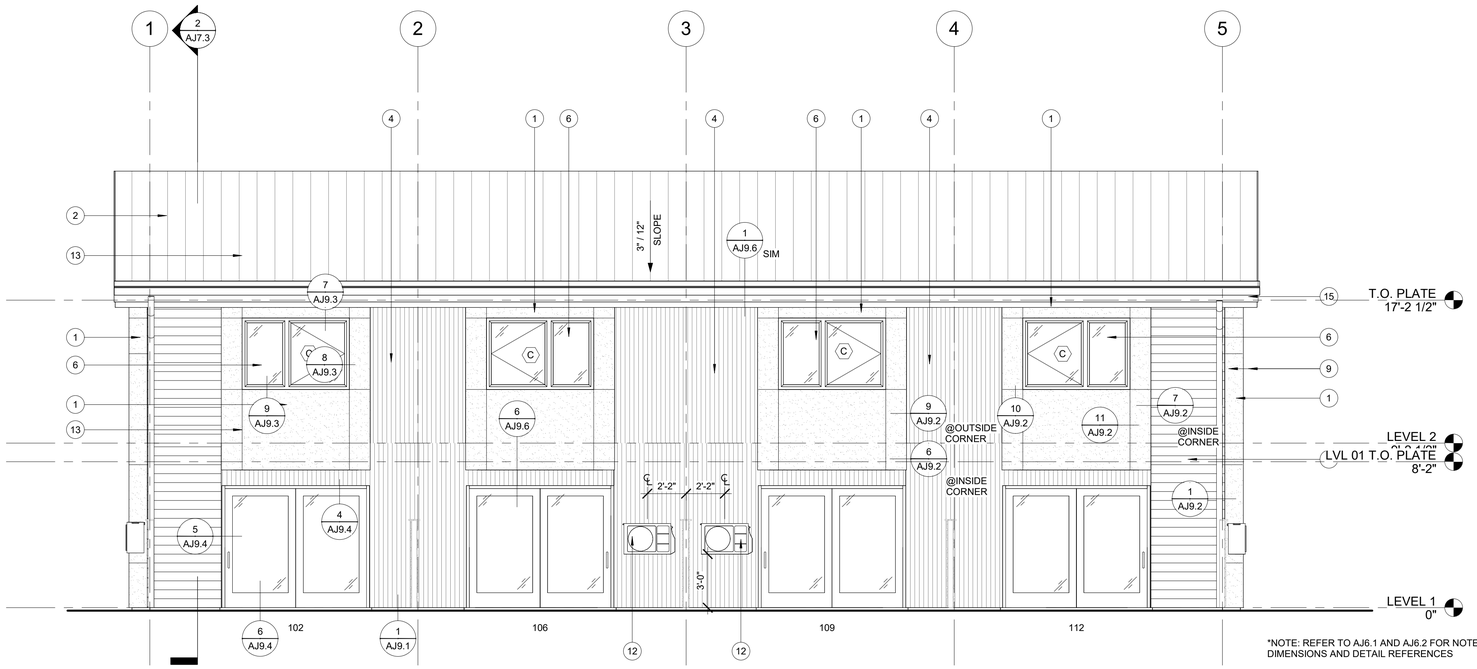

*NOTE: REFER TO AJ6.1 AND AJ6.2 FOR NOTES, DIMENSIONS AND DETAIL REFERENCES

EXTERIOR ELEVATION - NORTH - LOT 25 (2)

SCALE: 1/4" = 1'-0" (24 X 36)
SCALE: 1/8" = 1'-0" (11 X 17)

GENERAL NOTES - EXT ELEVATIONS

A. ELEVATION KEYNOTES APPLY TO SHEETS AJ6.1 - AJ6.4. ALL KEYNOTES MAY NOT OCCUR ON THIS SHEET AND DO NOT APPLY TO ANY OTHER SHEETS EXCEPT THOSE NOTED.

B. SEE AJ1.1 FOR WALL ASSEMBLIES

C. GRIDS ARE FOR REFERENCE ONLY. CONTRACTOR TO SET CONTROL POINTS FOR LAYOUT.

KEYNOTES - EXTERIOR ELEVATIONS

1 09 24 00 - PORTLAND CEMENT PLASTER (STUCCO) WHITE
2 07 46 23 - T&G ACETYLATED WOOD SIDING, MILL STAINED & FIELD COATED. 6" HORIZONTALLY ORIENTED (WD-1)
3 ALIGN CONTROL JOINTS WITH WINDOW OPENINGS
4 07 42 13 - CORRUGATED METAL WALL PANELS (MP-2)
5 07 41 13 - STANDING SEAM METAL ROOF PANELS (MP-1)
6 08 53 00 - VINYL WINDOWS. BLACK EXTERIOR WHITE INTERIOR. WDW-1
7 08 16 13 - FIBERGLASS ENTRY DOOR
9 07 62 00 - METAL DOWNSPOUT FINISHED TO MATCH ROOF
12 23 00 00 - OUTDOOR AIR CONDITIONING UNIT. MOUNT TO WALL PER MANUFACTURER'S RECCOMENDATION.
13 1/4" STUCCO CONTROL JOINTS
14 WALL MOUNTED BIKE LOCK, INSTALL BACKING PER MANUFACTURER SPECS.
15 07 46 46 - 1X16 FIBER CEMENT FASCIA, WHITE, (FC-1)
16 07 46 46 - 1X10 FIBER CEMENT FASCIA, WHITE, (FC-1)
17 05 12 00 - STEEL HSS COLUMN, PER STRUCTURAL, BLACK

ksw ARCHITECTS
66 WATER STREET
SUITE 101
ASHLAND, OR
97520
TEL.: 541.488.8200

CONSTRUCTION DOCUMENTS

REGISTERED ARCHITECT
RAYMOND J. KISTLER
3172
ASHLAND, OREGON
STATE OF OREGON

CALDERA OAKS: BUILDING J

BENTELLA LLC
300 CLAY ST.
ASHLAND OR. 97520

REVISIONS

EXTERIOR ELEVATIONS - LOT 25

PROJECT NO.: 25-010
ISSUE DATE: 07.08.2025
SHEET:

AJ6.4

Copywrite 2025 KSW Architects LLC
This document, and the ideas and designs incorporated herein, as an instrument of professional service, is the property of Kistler Small + White Architects and is not to be used, in whole or in part, for any other project without the written authorization of Kistler Small + White Architects.

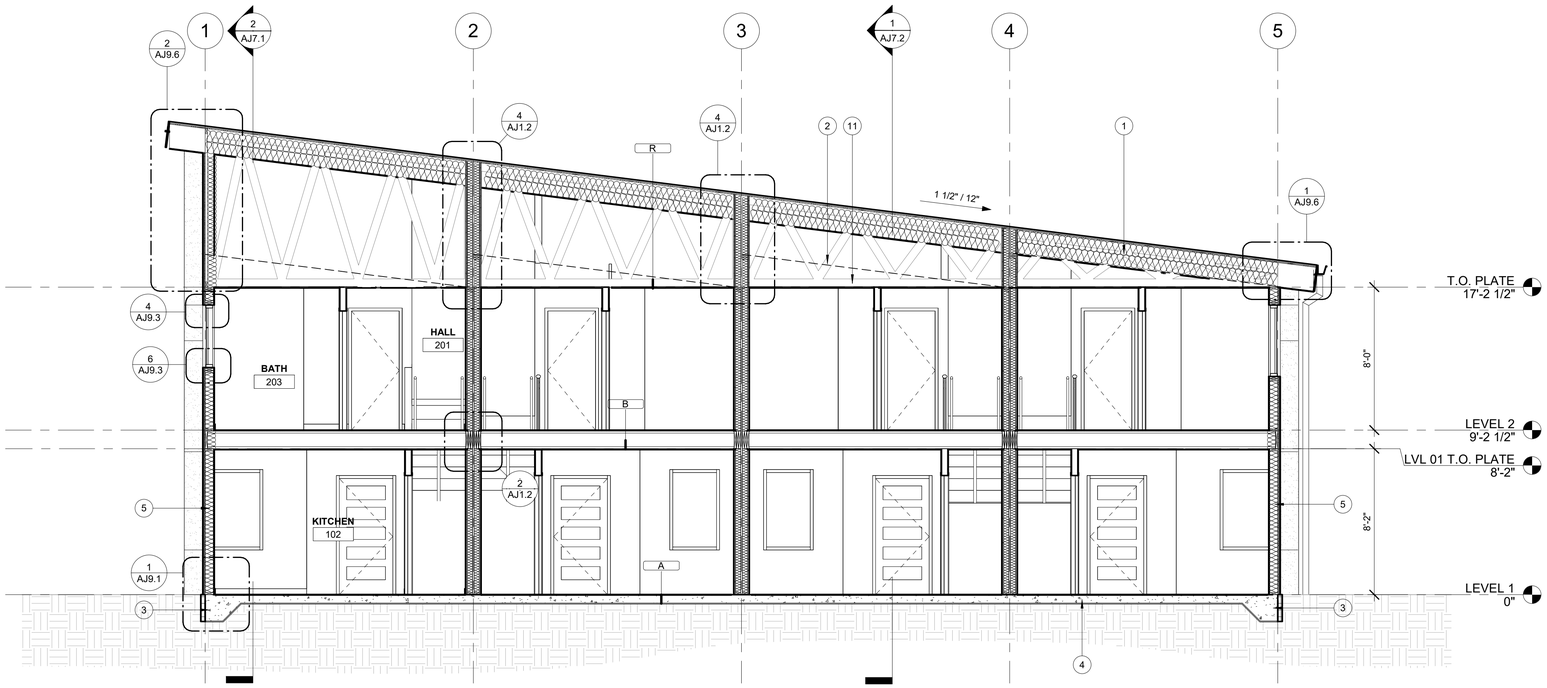

BUILDING SECTION - 1 (1)

SCALE: 1/4" = 1'-0" (24 X 36)
SCALE: 1/8" = 1'-0" (11 X 17)

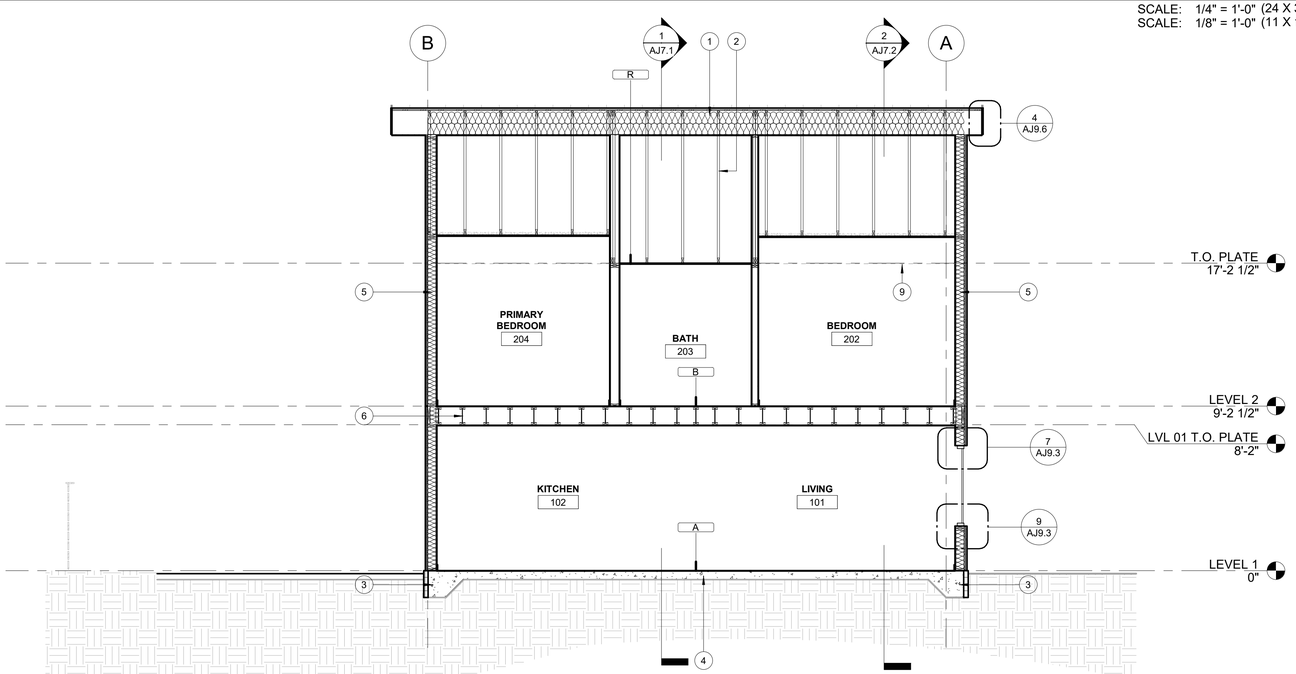

BUILDING SECTION - 2 (2)

SCALE: 1/4" = 1'-0" (24 X 36)
SCALE: 1/8" = 1'-0" (11 X 17)

GENERAL NOTES - BUILDING SECTIONS

A. SECTION KEYNOTES APPLY TO SHEET AJ7.1- AJ7.3 ALL KEYNOTES MAY NOT OCCUR ON THIS SHEET AND DO NOT APPLY TO ANY OTHER SHEETS EXCEPT THOSE NOTED.

B. SEE AJ1.1 FOR ASSEMBLIES.

C. GRIDS ARE FOR REFERENCE ONLY. CONTRACTOR TO SET CONTROL POINTS FOR LAYOUT.

KEYNOTES - SECTION (1)

1	07 21 00 - FIBERGLASS BATT INSULATION, TYP IN ROOF, REFER TO ASSEMBLIES
2	06 17 53 - SHOP-FABRICATED LIGHT WOOD TRUSSES, REFER STRUCTURAL
3	03 30 00 - THICKENED CONCRETE SLAB EDGE, REFER TO STRUCUTRAL, TYP
4	03 30 00 - CONCRETE SLAB ON GRADE, REFER TO STRUCTRUAL
5	07 21 00 - FINBERGLASS BATT INSULATION AT WALL, TYP., REFER TO ASSEMBLIES
6	06 17 33 - FLOOR JOISTS, REFER STRUCTURAL
7	HSS STEEL BEAM, REFER STRUCTURAL
8	4" STEEL DOWNSPOUT, MOUNT TO AND MATCH SLOPE OF HSS POST
9	DEDUCT ALT # 1: FLAT LID CEILINGS AT LEVEL 2 BEDROOMS, TYP.
10	03 30 00 - EXTERIOR CONCRETE PORCH SLAB, REFER TO STRUCTURAL. MINIMUM 1/4" / 12" SLOPE (2%) AT CONCRETE PATIO, FEATHER SLAB AS NECESSARY TO MAINTAIN POSITIVE SLOPE AWAY FROM BUILDING, TYP.
11	06 10 00 - FLAT CEILING FRAMING REQUIRED AT AREAS OF FLAT CEILING (REF RCPS). REFER TO STRUCUTRAL.

ksw ARCHITECTS
66 WATER STREET
SUITE 101
ASHLAND, OR
97520
TEL.: 541.488.8200

CONSTRUCTION DOCUMENTS

REGISTERED ARCHITECT
RAYMOND J. KISTLER
3172
ASHLAND, OREGON
STATE OF OREGON

CALDERA OAKS: BUILDING J

BENTELLA LLC
300 CLAY ST.
ASHLAND OR. 97520

REVISIONS

BUILDING SECTIONS

PROJECT NO.: 25-010
ISSUE DATE: 07.08.2025
SHEET:

AJ7.1

8/15/2025 2:27:15 PM

This document, and the ideas and designs incorporated herein, as an instrument of professional service, is the property of Kistler Small + White Architects and is not to be used, in whole or in part, for any other project without the written authorization of Kistler Small + White Architects.

Copyright 2025 KSW Architects LLC

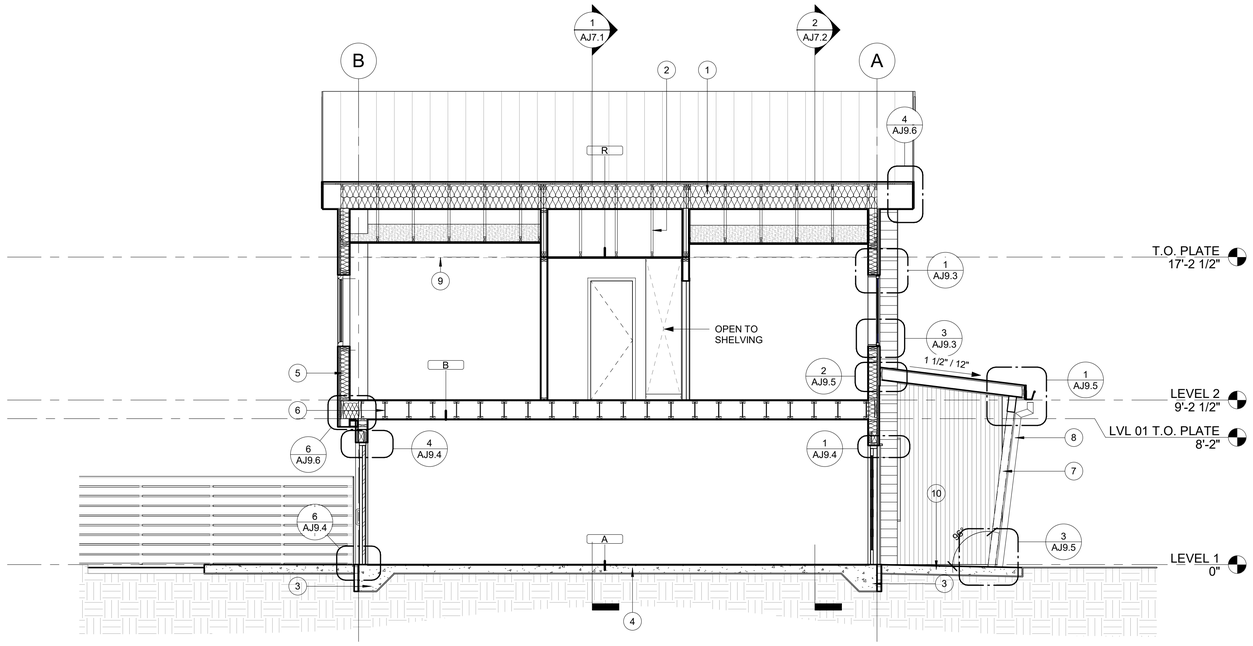

BUILDING SECTION - 3 (1)

SCALE: 1/4" = 1'-0" (24 X 36)
SCALE: 1/8" = 1'-0" (11 X 17)

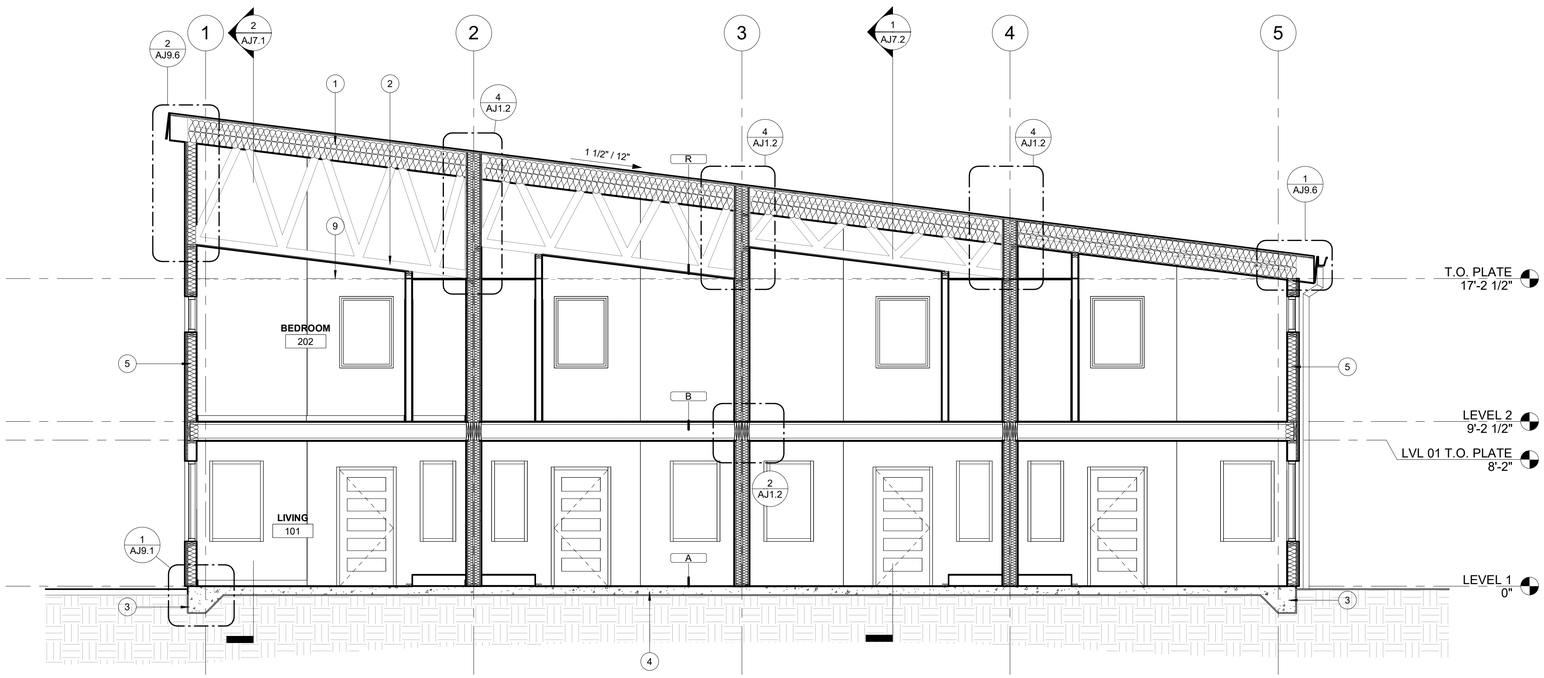

BUILDING SECTION - 4 (2)

SCALE: 1/4" = 1'-0" (24 X 36)
SCALE: 1/8" = 1'-0" (11 X 17)

GENERAL NOTES - BUILDING SECTIONS

A. SECTION KEYNOTES APPLY TO SHEET AJ7.1- AJ7.3 ALL KEYNOTES MAY NOT OCCUR ON THIS SHEET AND DO NOT APPLY TO ANY OTHER SHEETS EXCEPT THOSE NOTED.

B. SEE AJ1.1 FOR ASSEMBLIES.

C. GRIDS ARE FOR REFERENCE ONLY. CONTRACTOR TO SET CONTROL POINTS FOR LAYOUT.

KEYNOTES - SECTION (1)

1	07 21 00 - FIBERGLASS BATT INSULATION, TYP IN ROOF, REFER TO ASSEMBLIES
2	06 17 53 - SHOP-FABRICATED LIGHT WOOD TRUSSES, REFER STRUCTURAL
3	03 30 00 - THICKENED CONCRETE SLAB EDGE, REFER TO STRUCUTRAL, TYP
4	03 30 00 - CONCRETE SLAB ON GRADE, REFER TO STRUCTRUAL
5	07 21 00 - FINBERGLASS BATT INSULATION AT WALL, TYP., REFER TO ASSEMBLIES
6	06 17 33 - FLOOR JOISTS, REFER STRUCTURAL
7	HSS STEEL BEAM, REFER STRUCTURAL
8	4" STEEL DOWNSPOUT, MOUNT TO AND MATCH SLOPE OF HSS POST
9	DEDUCT ALT # 1: FLAT LID CEILINGS AT LEVEL 2 BEDROOMS, TYP.
10	03 30 00 - EXTERIOR CONCRETE PORCH SLAB, REFER TO STRUCTURAL. MINIMUM 1/4" / 12" SLOPE (2%) AT CONCRETE PATIO, FEATHER SLAB AS NECESSARY TO MAINTAIN POSITIVE SLOPE AWAY FROM BUILDING, TYP.
11	06 10 00 - FLAT CEILING FRAMING REQUIRED AT AREAS OF FLAT CEILING (REF RCPS). REFER TO STRUCUTRAL.

ksw ARCHITECTS
66 WATER STREET
SUITE 101
ASHLAND, OR
97520
TEL.: 541.488.8200

CONSTRUCTION DOCUMENTS

REGISTERED ARCHITECT
RAYMOND J. KISTLER
3172
ASHLAND, OREGON
STATE OF OREGON

CALDERA OAKS: BUILDING J

BENTELLA LLC
300 CLAY ST.
ASHLAND OR. 97520

REVISIONS

BUILDING SECTIONS

PROJECT NO.: 25-010
ISSUE DATE: 07.08.2025
SHEET:

AJ7.2

8/15/2025 2:27:15 PM
This document, and the ideas and designs incorporated herein, as an instrument of professional service, is the property of Kistler Small + White Architects and is not to be used, in whole or in part, for any other project without the written authorization of Kistler Small + White Architects.
Copyright 2025 KSW Architects LLC

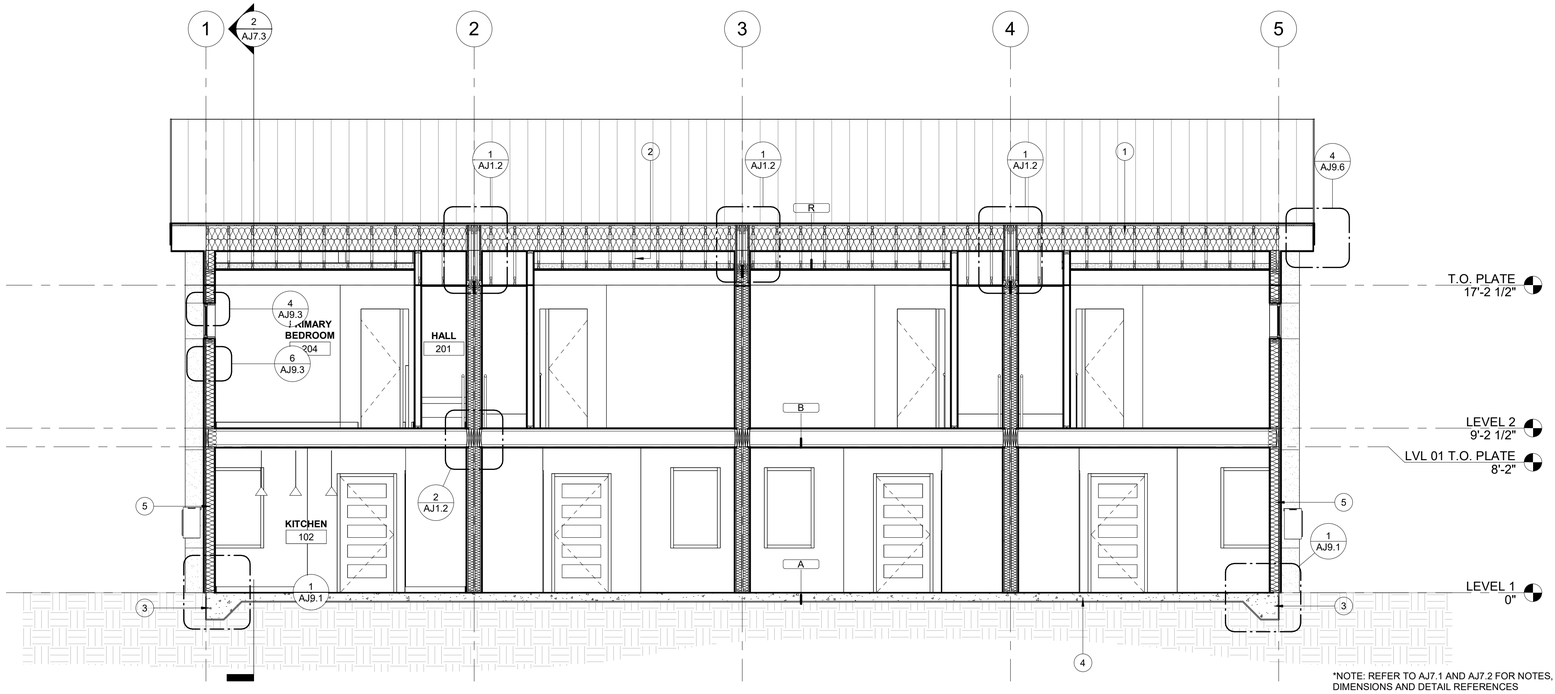

*NOTE: REFER TO AJ7.1 AND AJ7.2 FOR NOTES, DIMENSIONS AND DETAIL REFERENCES

BUILDING SECTION - 1 - LOT 25 (1)

SCALE: 1/4" = 1'-0" (24 X 36)
SCALE: 1/8" = 1'-0" (11 X 17)

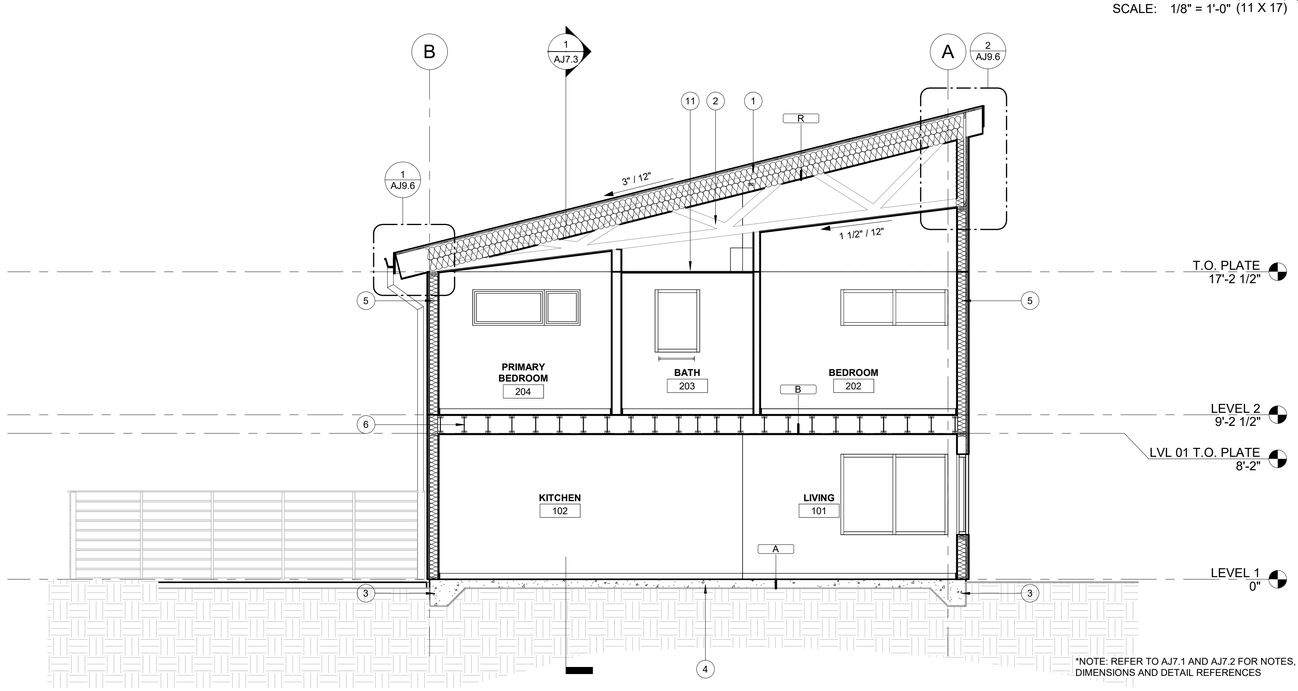

*NOTE: REFER TO AJ7.1 AND AJ7.2 FOR NOTES, DIMENSIONS AND DETAIL REFERENCES

BUILDING SECTION - 2 - LOT 25 (2)

SCALE: 1/4" = 1'-0" (24 X 36)
SCALE: 1/8" = 1'-0" (11 X 17)

GENERAL NOTES - BUILDING SECTIONS

A. SECTION KEYNOTES APPLY TO SHEET AJ7.1- AJ7.3 ALL KEYNOTES MAY NOT OCCUR ON THIS SHEET AND DO NOT APPLY TO ANY OTHER SHEETS EXCEPT THOSE NOTED.

B. SEE AJ1.1 FOR ASSEMBLIES.

C. GRIDS ARE FOR REFERENCE ONLY. CONTRACTOR TO SET CONTROL POINTS FOR LAYOUT.

KEYNOTES - SECTION (1)

1	07 21 00 - FIBERGLASS BATT INSULATION, TYP IN ROOF, REFER TO ASSEMBLIES
2	06 17 53 - SHOP-FABRICATED LIGHT WOOD TRUSSES, REFER STRUCTURAL
3	03 30 00 - THICKENED CONCRETE SLAB EDGE, REFER TO STRUCUTRAL, TYP
4	03 30 00 - CONCRETE SLAB ON GRADE, REFER TO STRUCTRUAL
5	07 21 00 - FINBERGLASS BATT INSULATION AT WALL, TYP., REFER TO ASSEMBLIES
6	06 17 33 - FLOOR JOISTS, REFER STRUCTURAL
7	HSS STEEL BEAM, REFER STRUCTURAL
8	4" STEEL DOWNSPOUT, MOUNT TO AND MATCH SLOPE OF HSS POST
9	DEDUCT ALT # 1: FLAT LID CEILINGS AT LEVEL 2 BEDROOMS, TYP.
10	03 30 00 - EXTERIOR CONCRETE PORCH SLAB, REFER TO STRUCTURAL. MINIMUM 1/4" / 12" SLOPE (2%) AT CONCRETE PATIO. FEATHER SLAB AS NECESSARY TO MAINTAIN POSITIVE SLOPE AWAY FROM BUILDING, TYP.
11	06 10 00 - FLAT CEILING FRAMING REQUIRED AT AREAS OF FLAT CEILING (REF RCPS). REFER TO STRUCUTRAL.

ksw ARCHITECTS
66 WATER STREET
SUITE 101
ASHLAND, OR
97520
TEL.: 541.488.8200

CONSTRUCTION DOCUMENTS

REGISTERED ARCHITECT
RAYMOND J. KISTLER
3172
ASHLAND, OREGON
STATE OF OREGON

CALDERA OAKS: BUILDING J

BENTELLA LLC
300 CLAY ST.
ASHLAND OR. 97520

REVISIONS

BUILDING SECTIONS - LOT 25

PROJECT NO.: 25-010
ISSUE DATE: 07.08.2025
SHEET:

AJ7.3

8/15/2025 2:27:16 PM
This document, and the ideas and designs incorporated herein, as an instrument of professional service, is the property of Kistler Small + White Architects and is not to be used, in whole or in part, for any other project without the written authorization of Kistler Small + White Architects.
Copyright© 2025 KSW Architects LLC

CITY OF
ASHLAND
Community Development – Planning Department
20 East Main Street, Ashland, OR 97520
Phone 541-488-5303 Fax 541-488-6006

For County Use

SOLAR ACCESS WAIVER AGREEMENT

Planning Action #_____

Address of Property Requesting Solar Waiver Lot 25 Caldera Oaks Subdivision (TBD)

Tax Lot # of Property Requesting Solar Waiver TBD

Address of Property Agreeing to Solar Waiver 2272 Dollarhide Way

Legal Description of Property Agreeing to Solar Waiver (Attach, if necessary) Lot 27, Bud's Dairy, A Planned Community, of the City of Ashland, Jackson County, Oregon, Accoring to the Offical Plat Thereof, Recorded in Volume 30 Page 39, plat records.

The undersigned, for themselves, their heirs, successors and assigns, consent to permit obstruction of their solar access rights described in Chapter 18.4.8.020 of the Ashland Municipal Code on that portion of property in Township 39, Range 1 East, Section 11CB Tax Lot # 1035), further described by legal description in the attached Exhibit "A".

The undersigned certify and agree to the following:

1. This agreement shall be binding upon their heirs, successors and assigns and shall run with the land.
2. The undersigned are the owners of the property described on Exhibit "A".
3. This waiver applies only to the specific building(s) noted in the attached Exhibit "B"; and to the shadow(s) cast by such building(s) as noted in Exhibit "B".
4. The solar access rights described in Chapter 18.4.8 of the Ashland Municipal Code are waived only for that buildable space shown on Exhibit "B" and the City of Ashland is indemnified and shall be held harmless for any damages resulting to any person or property resulting from this waiver.
5. The consideration for this agreement is $1.00 and other good and valuable consideration, the receipt of which is acknowledged by the undersigned.

Property Owner(s) Agreeing to Solar Waiver _____

Signature _____ Date _____

Signature _____ Date _____

State of Oregon)
County of Jackson)

On this _____ day of _____, 20_____, before me personally appeared, _____, whose identity was proven to me on the basis of satisfactory evidence to be the person(s) whose name(s) is (are) subscribed to this instrument, and acknowledged that he (she) (they) executed the same.

Notary Public for Oregon *Commission Expiration Date*

Approved by City of Ashland Planning Staff _____ Date _____

NOTE: The following exhibits must be attached to the Solar Access Waiver Agreement: (Make sure documents have at least a 1" margin on all sides for County recording purposes)

EXHIBIT A

(Legal description of property agreeing to solar waiver)

EXHIBIT B

(Plot plan of both the property requesting solar waiver and the property agreeing to the waiver. The plot plan must show, on the requesting property, the specific building(s) and shadow(s) cast by such building(s) and, on the agreeing property, the buildable space affected. See attached sample.)

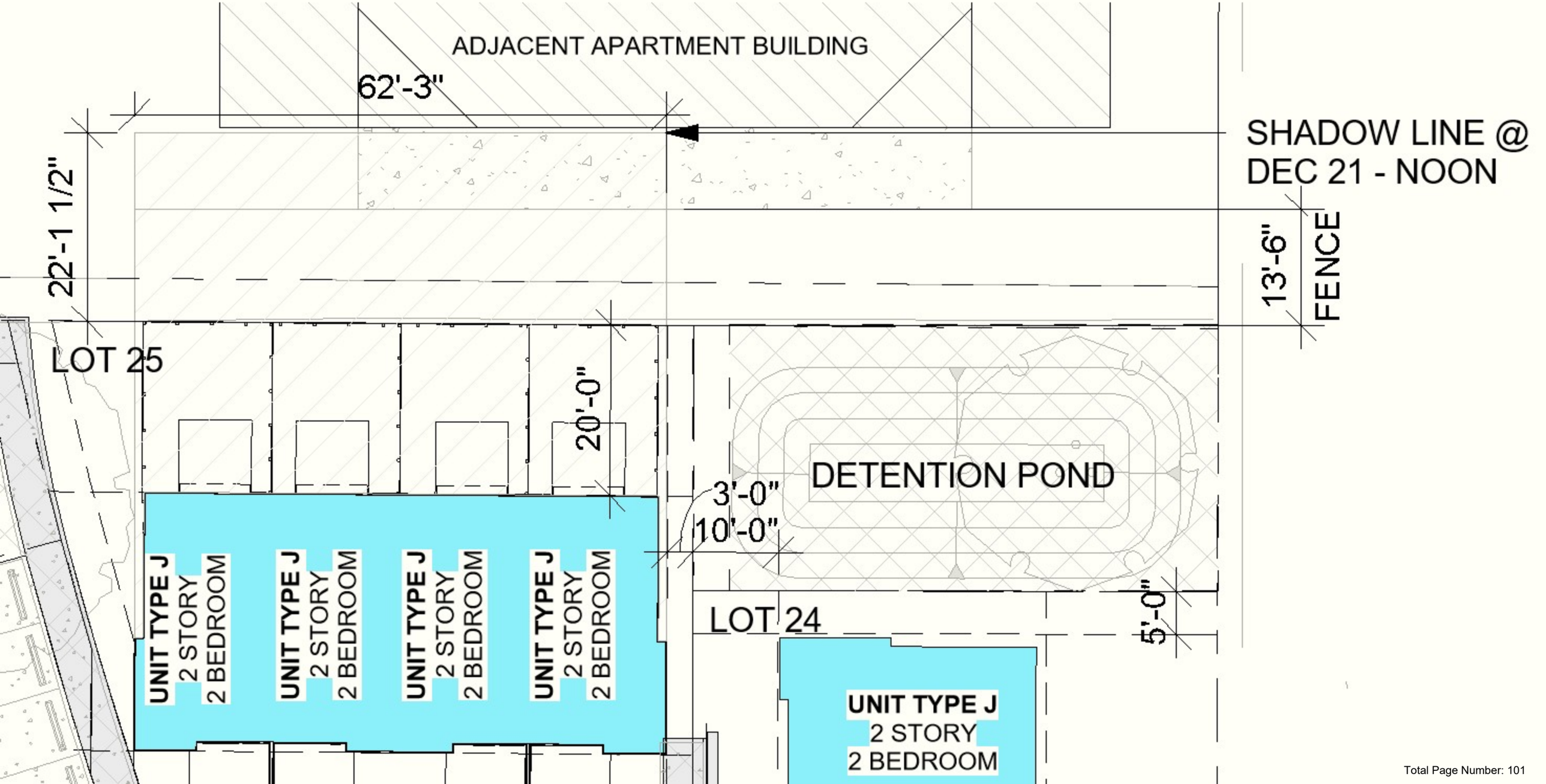
ADJACENT APARTMENT BUILDING
62'-3"
SHADOW LINE @
DEC 21 - NOON
22'-1 1/2"
13'-6"
FENCE
LOT 25
20'-0"
DETENTION POND
3'-0"
10'-0"
UNIT TYPE J
2 STORY
2 BEDROOM
UNIT TYPE J
2 STORY
2 BEDROOM
UNIT TYPE J
2 STORY
2 BEDROOM
UNIT TYPE J
2 STORY
2 BEDROOM
LOT 24
5'-0"
UNIT TYPE J
2 STORY
2 BEDROOM

BENTELLA DEVELOPMENT

September 5, 2025

Memorandum of Understanding

PROJECT NAME: Caldera Oaks Subdivision

PROJECT ADDRESS: 300 Clay St. Ashland, OR and 2272 Dollarhide Way, Ashland, OR

BETWEEN: Bentella LLC 3132 Tiger Run Ct. #101 Carlsbad, CA 92010, and

ACCESS 3630 Aviation Way Medford, OR 97504

Bentella LLC is the owner/developer of Caldera Oaks Subdivision, and one of the proposed fourplex structures requires a Solar Setback Waiver to be signed by ACCESS for potential impact on the ACCESS property.

Both parties hereby agree that in the event ACCESS experiences detrimental frost in the area of concern at their property, 2272 Dollarhide Way, after the completion of the new adjacent structure at Caldera Oaks Subdivision, that Bentella LLC will provide up the [redacted] in landscape improvements, any time up to 24 months after the Certificate of Occupancy for the new structure is issued. ACCESS must provide evidence and written notice to Bentella LLC within the specified timeframe.

Based on these terms, ACCESS hereby agrees to sign the Solar Setback Waiver within 5 business days of the form being completed and ready for signature by all parties.

Sean Preston of ACESS: Sean Preston

Date: 09/11/2025

Ryan Csaftis of Bentella LLC: _____

Date: _____

INFORMATIONAL ONLY

Resolution No. 90- 21

A RESOLUTION OF THE CITY OF ASHLAND, OREGON ENDORSING THE VALDEZ PRINCIPLES AS A GUIDE FOR DAY TO DAY CITY OPERATIONS AND PROGRAMS.

WHEREAS, the City of Ashland has consistently shown our concern for environment; and

WHEREAS, the City of Ashland has provided many energy saving programs to our citizens; and

WHEREAS, the City of Ashland worked to provide recycling and alternative transportation opportunities for our citizens; and

WHEREAS, the Valdez Principles embody an environmental framework for future City actions.

NOW, THEREFORE, be it resolved by the Mayor and City Council as follows:

> The City of Ashland hereby endorses the attached set of Valdez Principles as modified for the City of Ashland.

The foregoing Resolution was READ and DULY ADOPTED at a regular meeting of the City Council of the City of Ashland on the 15th day of May, 1990.

Nan E. Franklin
City Recorder

Catherine Golden
Mayor

9/22/25

To the Council & Planning Commission
attached is a framework that
is to dominate all decision making
in Ashland. The Principles are still relevant
Best regards
Brent Thompson

Valdez Principles

By endorsing these Principles, we publicly affirm our belief that the City of Ashland, Oregon has a direct responsibility for the environment. We believe that we must conduct the public's business as responsible stewards of the environment and seek goals only in a manner that leaves the Earth healthy and safe. We believe that the City must not compromise the ability of future generations to sustain their needs.

We recognize this to be a long-term commitment to update our practices continually in light of advances in technology and new understandings in health and environmental science. We intend to make consistent, measurable progress toward the ideal that these principles describe, and to apply them wherever we operate, in a manner consistent with our other obligations under law.

1. **Protection of the Biosphere.**
We will minimize and strive to eliminate the release of any pollutant that may cause environmental damage to air, water, or earth or its inhabitants. We will safeguard habitats in creeks, ponds, wetlands, natural areas and will minimize contributing to global warming, depletion of the ozone layer, acid rain or smog.

2. **Sustainable Use of Natural Resources.**
We will make sustainable use of renewable natural resources, such as water, soils and forests. We will conserve nonrenewable natural resources through efficient use and careful planning. We will protect wildlife habitat, open spaces and wilderness, while preserving biodiversity.

3. **Reduction and Disposal of Waste.**
We will minimize the creation of waste, and wherever possible, recycle materials. We will dispose of all wastes through safe and responsible methods.

4. **Wise Use of Energy.**
We will make every effort to use environmentally safe and sustainable energy sources to meet our needs. We will invest in and promote energy efficiency and conservation in our operations and that of our citizens.

5. **Risk Reduction.**
We will minimize the environmental, health and safety risks to our employees and the communities in which we operate by employing safe technologies and operating procedures and by being constantly prepared for emergencies.

6. **Safe Products and Services.**
We will provide services that minimize adverse environmental impacts and that are safe for consumers. We will inform consumers of the environmental impacts of our services.

7. **Damage Compensation.**
We will take responsibility for any harm we cause to the environment by making every effort to fully restore the environment and to compensate those persons who are adversely affected.

8. **Disclosure.**
We will disclose to our employees and to the public incidents relating to our operations that cause environmental harm or pose health or safety hazards. We will disclose potential environmental, health, or safety hazards posed by our operations, and we will not take any action against employees who report any condition that creates a danger to the environment or poses health and safety hazards.

9. **Environmental Directors and Managers.**
At least one member of management will be a person qualified to represent environmental interests, and will commit management resources to implement these Principles.

10. **Annual Assessment.**
We will conduct and make public an annual self-evaluation of our progress in implementing these Principles and in complying with all applicable laws and regulations.

Endorsed by the Ashland City Council May 15, 1990